Delta MVD1000

Medium Voltage Drive
Product Manual

www.deltaww.com/mvd

Delta MVD1000

Medium Voltage Drive

Product Manual

Version: Rev00
English
Release date: 2014-11

Delta Electronics

Preface

The MVD1000 medium voltage drive (MVD) is a high voltage electric equipment for motor control featuring high product integration, easy and convenient operation, excellent performance and a wide range of applications.

This manual provides the guidelines for installation, commissioning, operation, fault diagnosis and routine maintenance for the MVD1000 medium voltage drive. To take full advantage of the product functions and ensure the safety of the operator and the equipment, please read through this manual before using the equipment, and keep it properly stored for further use.

Please read the contents indicated with “Danger” or “Caution” in this manual carefully. During usage, if there are any questions which cannot be solved by means of this manual, please contact our local agent or directly our company. Our professional technical personnel will serve you promptly.

The operator shall pay special attention to the following items when operating this product:

Danger!

- The MVD earthing terminal PE ⏚ must be earthed reliably.
- The MVD shall not be connected to the high voltage power supply until all the electric cabinet doors are confirmed to be reliably closed and the cabinet doors can not be opened after the MVD is powered on.
- The MVD cabinet doors must be kept closed for 15 minutes after the high voltage is cut off.
- The control auxiliary power must be kept connected when the MVD is connected to high voltage or after the power indicator of power cell is turned off; otherwise it may cause abnormalities in the functions of the power cell and damage the cell.

Warning!

- Operation by non-professional personnel is prohibited.
- Before testing the motor or the motor cable, the wires between the motor and the MVD shall be disconnected.
- Do not touch the internal control panel of the MVD before taking electrostatic prevention measures.

Caution!

- Wiring operation must be conducted under the guidance of our professional personnel in accordance with the related electric operation safety standards.
- The commissioning, operation and maintenance personnel must wear insulation shoes and gloves, and each operator shall be supervised by one controller on site.
- The user cannot change the installation, wiring and parameters of the MVD. If the change is needed, the user must contact our company for confirmation.

Contents

I. General

1-1 Product characteristics

The Delta MVD1000 medium voltage drive is a high voltage alternating current speed regulating device developed and produced by Delta Electronics. The product features comprise of excellent performance, easy and convenient operation and a wide range of applications using IGBT power devices and complete digital control.

1. High efficiency and low distortion

- By using multi-pulse input rectification transformer technology, which efficiently lowers the content of the power side distortion current to less than 5%. It meets the IEEE 519-1992 standard and the strict requirements of electric grids for distortion, and enhances the power factor to more than 0.96 lagging;
- By using cell cascaded multilevel technology without the need of an output filter and with an output voltage waveform similar to sine wave output; the dv/dt is small, which is applicable to long cable motor installations without any damage to the cable and motor insulation;
- System efficiency >98% (rated, excluding transformer)

2. Tolerant to power disturbances and wide applicable scope

- When the input voltage is as low as 70%, the system can still continuously conduct derated operation;
- With automatic output voltage adjusting function, when the input voltage fluctuates from 90% to 110%, the output voltage can still be kept steady, thus realizing safe and steady operation of the motor.

3. High reliability

- SOA design ensures that the system operates in a wide safe range: (1) sufficient design margin makes sure that each device operates in the middle area of the safe operating area; (2) optimized thermal design ensures temperature margin for the devices; (3) professional laminated busbar technology effectively reduces stray inductance and IGBT electric stress, thus enhancing the device's reliability and decreasing the switching loss; (4) the dc-link capacitors are designed for long lifetime service.
- Redundant auxiliary control power.
- With automatic bypass function configured according to the users' requirements, the motor can be switched from variable frequency to power line frequency and vice-versa.
- The system provides a self-diagnosis function to show the position and type of failure and warn the user about the fault occurrence.
- Automatic detection and warning function for cooling fan failure or excessive dust in the inlet air filter notifying the user to conduct maintenance;

- The strict Delta's quality assurance program, production quality management, control flow process, and perfect test equipment and methods ensure the effective implementation of each test item for devices, components and units during the manufacturing process.

4. Site flexibility

- The compact structure and high power density of MVD1000 can reduce the requirements for site space.
- The electric connections between the cabinets use highly reliable connectors which are easy to install and maintain.
- Friendly human-machine interface, easy to operate.
- Sufficient communication interfaces, which can be professionally configured in accordance with the application requirements.
- All PCBs are coated to avoid problems with pollution and corrosive environment.

1-2 Major application

The MVD1000 medium voltage drive is equipped with V/F control, which makes it applicable to regulating the speed of fans, pumps and compressors to provide energy saving, improve process control, and to prolong the lifetime of all mechanical equipment related to the application due to smooth motor control. The application fields comprise the following:

- Power Generation: Forced draft fan, induced draft fan, boiler feed-water pump, cooling water pump, compressor, circulation water pump, compressor, condensator pump
- Oil & Gas: Gas compressor, electrical submersible pump, pipeline pump, brine pump, feed-water pump
- Mining: Ventilation fan, baghouse fan, slurry pump, feed pump, gas compressor, blast furnace fan
- Metallurgy: Forced draft fan (FDF), induced draft fan (IDF), baghouse fan, descaling pump, feed-water pump, booster pump, coiler blast, furnace fan, gas compressor
- Cement: Kiln IDF, baghouse fan, separator fan, raw mill IDF
- Public Facilities: FDF, IDF, raw sewage pump, freshwater pump, feed-water pump

1-3 Technical parameters

MVD1000		
System technology		IGBT-based cascaded power cell connection technique
Efficiency		>98% (at rated, excluding transformer)
Input	Voltage range	-10% to +10% (normal operation); -10% to -30% (derated continuous operation)
	Frequency	50Hz or 60Hz (-2% to +2%)
	Control power	AC380V (three-phase four-wire) or AC220V; capacity: 5kVA

MVD1000		
	Input current distortion	<5% (at rated)
	Power factor	>0.96 (at rated)
Output	Frequency range	0~75Hz
	Frequency resolution	0.01Hz
	Overload capacity[1]	120% for 1 min every 10 min, 150%: stop immediately
Control Parameters	Control method	V/F
	PID function	Built-in PID regulator with configurable parameters
	Modulation method	SPWM/SVPWM
	Speed acceleration & deceleration time	0~3000s (configurable)
	Alarms	Power cell under-voltage, analog reference loss, cooling fan over-temperature, cooling fan power supply failure, cabinet over-pressure, air filter blocked, control power supply failure, transformer high-temperature, HMI communication failure, ac input under-voltage, UPS failure, PLC communication failure, flying start failure
	Protections	Over-current, over-load, short-circuit, input over-voltage, input/output phase loss, input voltage power loss, output fault to ground, transformer over-temperature, power cell communication failure, optical fiber communication failure, high-voltage cabinet door open, control power supplies failures, power cell 24V power supply failure, power cell over-temperature, power cell over-voltage, power cell IGBT gate drive failure
	Functions	Torque boost, frequency skipping, automatic voltage, regulation, failure diagnosis, flying start, system bypass, ride through, multipoint V/F control, power cell bypass (optional), automatic dehumidification (optional), VF/PF automatic switching function (optional)
	Analog input	0~10V/4~20mA, 2 channels (expandable)
	Analog output	0~10V/4~20mA, 4 channels (expandable)
	Digital input / output	10 digital inputs, 8 digital outputs (expandable)
	Human-machine interface	English / Chinese touch-screen LCD display
	Display parameters	Target Frequency, output frequency, input & output currents and operation status indication
	Communication interface	Isolated RS485, Industrial Ethernet (optional), Profibus-DP (optional) , GPRS (optional)

MVD1000		
	Communication protocol	MODBUS, PROFIBUS (optional)
Operation environment	Operation temperature	-5°C to +40°C (normal operation) +40 °C to +50 °C (derated operation)
	Storage/transportation temperature	-40 °C to +70 °C
	Relative humidity	5% to 95%, no condensation
	Altitude	<1000m (normal operation), derated use at higher altitude
Structure	Dimension and weight	For the details, see the specification table.
	Color	RAL7035 (or tailored according to the color code provided by the customer)
Cooling		Forced air cooling
Protection level		IP30 (standard), others can be customized

..

1-4 Model description

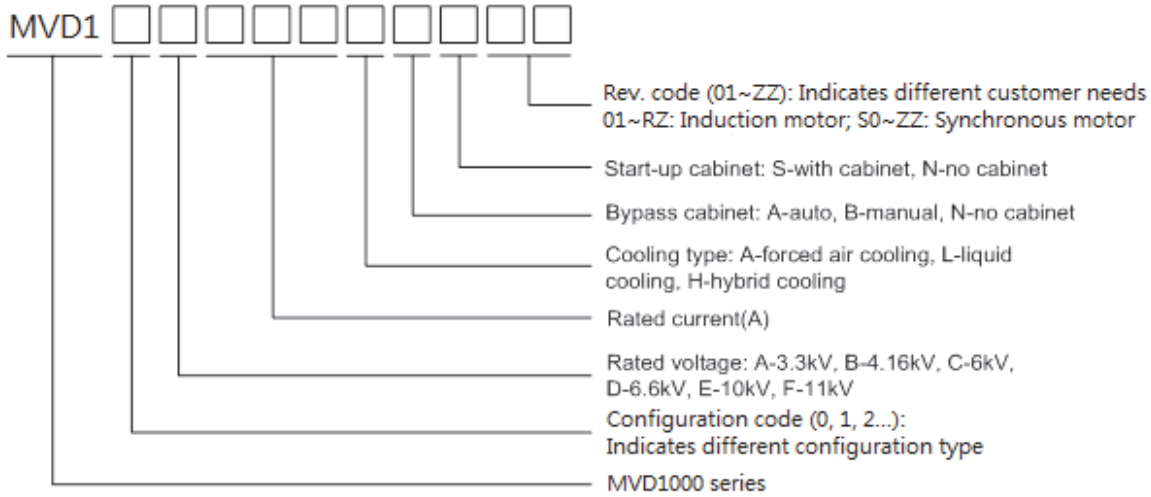

For example, MVD10C250ABN01 represents a standard MVD1000 product rated at 6kV, 250A, including forced air cooling, manual bypass cabinet and no startup cabinet, used to drive asynchronous motor.

1-5 Standards

Standard No.	Standard Name
GB/T 156-2007	Standard Voltages
GB/T 1980-2005	Standard Frequencies
GB/T 2423.10-2008	Environmental testing for electric and electronic products - Part 2: Test methods - Test Fc: Vibration (sinusoidal)
GB 2681-81	Colors of insulated conductors used in electrical assembly devices
GB 2682-1981	Colors of indicator lights and push-buttons used in electrical assembly

Standard No.	Standard Name
	devices
GB/T 3797-2005	Electrical control assemblies
GB/T 3859.1-93	Semiconductor convertors - Specification of basic requirements
GB/T 3859.2-93	Semiconductor convertors - Application guide
GB/T 3859.3-93	Semiconductor convertors - Transformers and reactors
GB 4208-2008	Degrees of protection provided by enclosures (IP code)
GB/T 4588.1-1996	Sectional specification: Single and double sided printed boards without plain holes
GB/T 4588.2-1996	Sectional specification: single and double sided printed boards with plated-through holes
GB 7678-87	Semiconductor self - commutated convertors
GB/T 10233-2005	Basic testing method for low-voltage switchgear and control-gear assemblies
GB 12668-90	General specification for speed control assembly with semiconductor adjustable frequency for A.C. motor
GB/T 15139-94	General technical standard for electrical equipment structure
GB/T 13422-92	Power semiconductor converters—Electrical test methods
GB/T 14549-93	Quality of electric energy supply-Harmonics in public supply network
GB/T 12668.3-2003	Adjustable speed electrical power drive systems Part 3: EMC product standard including specific test methods
GB/T 12668.4-2006	Adjustable speed electrical power drive systems—Part 4: General requirements—Rating specifications for A.C. power drive systems above 1000 V A.C. not exceeding 35 kV
IEEE 519-1992	IEEE recommended practices and requirements for harmonic control in electrical power systems
IEC 60038	IEC standard voltages
IEC 60076-1	Power transformers - Part 1: General
IEC 60076-11	Power transformers - Part 11: Dry-type transformers
IEC 60076-12	Power transformers - Part 12: Loading guide for dry-type power transformers
IEC 60076-2	Power transformers - Part 2: Temperature rise
IEC 60076-3	Power transformers - Part 3: Insulation levels, dielectric tests and external clearances in air
IEC 60721-3-1	Classification of environmental conditions - Part 3 Classification of groups of environmental parameters and their severities - Section 1: Storage
IEC 60721-3-2	Classification of environmental conditions - Part 3: Classification of groups of environmental parameters and their severities - Section 2: Transportation
IEC 60721-3-3	Classification of environmental conditions - Part 3-3: Classification of groups of environmental parameters and their severities - Stationary use at

Standard No.	Standard Name
	weather protected locations
IEC 61000-2-4	Electromagnetic compatibility (EMC) - Part 2-4: Environment - Compatibility levels in industrial plants for low-frequency conducted disturbances
IEC 61800-3	Adjustable speed electrical power drive systems - Part 3: EMC requirements and specific test methods
IEC 61800-4	Adjustable speed electrical power drive systems - Part 4: General requirements - Rating specifications for a.c. power drive systems above 1000V a.c. and not exceeding 35kV
IEC 61800-5-1	Adjustable speed electrical power drive systems - Part 5-1: Safety requirements - Electrical , thermal and energy

II. System hardware and its principles

2-1 System hardware

The MVD1000 medium voltage drive consists of a controller cabinet, power cell cabinet, transformer cabinet and bypass cabinet. Other components can be configured in accordance with the customers' requirements in the actual application.

Subject to the medium voltage drive under the spec of 6kV/1000kW, 6.6kV1000kW, 10kV/900kW and 11kV/1000kW, and All-In-One cabinet with various models provided for option, the detailed information can be referred to the Annex C. MVD1000 Electrical parameters and dimensions table.

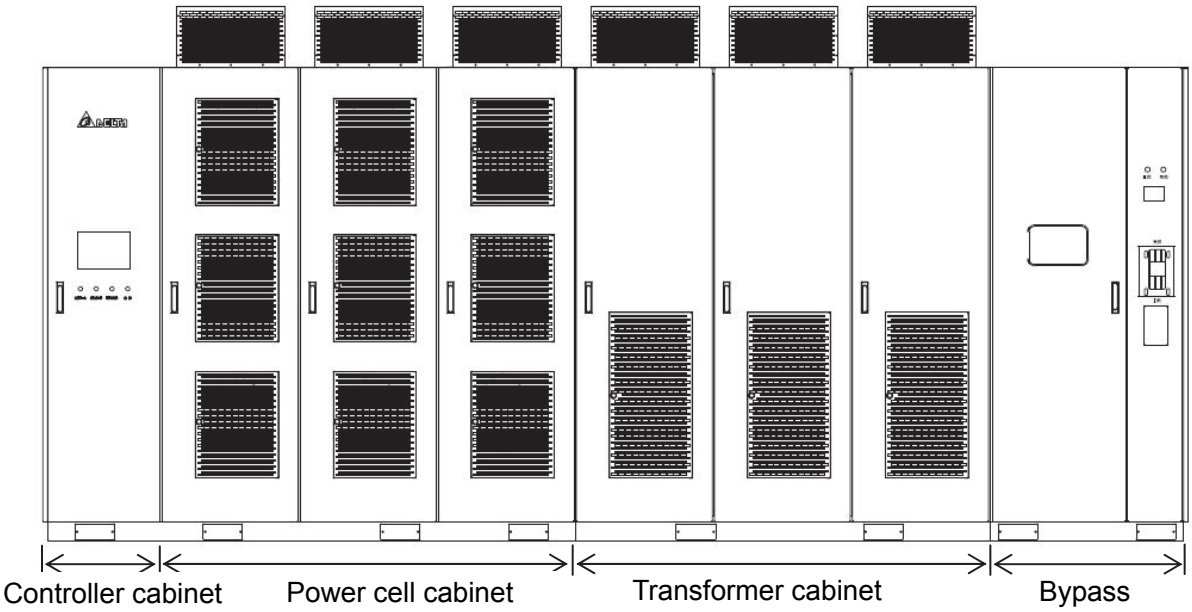

Fig. 2-1 System structure diagram

2-1-1 Controller cabinet

The controller cabinet is mainly used to lay out the main control system, PLC, HMI, isolation transformer, UPS and other accessories. Its internal structure diagram is as shown in Fig. 2-2.

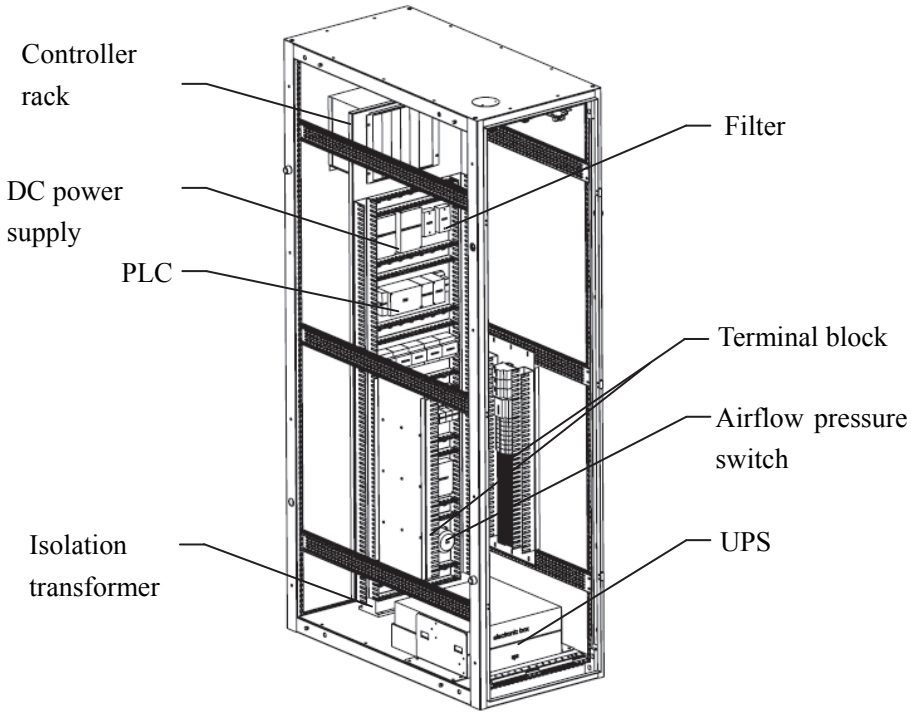

Fig. 2-2 Internal diagram of the controller cabinet

The main control system comprises a main control board, an I/O board, an A/D board, two fiber optical boards (extendable) and a power supply board, wherein the boards are connected with each other through the bus motherboard. The appearance of the main control system accommodated in the main control rack configured at the upper part inside the controller cabinet is as shown in Fig. 2-3.

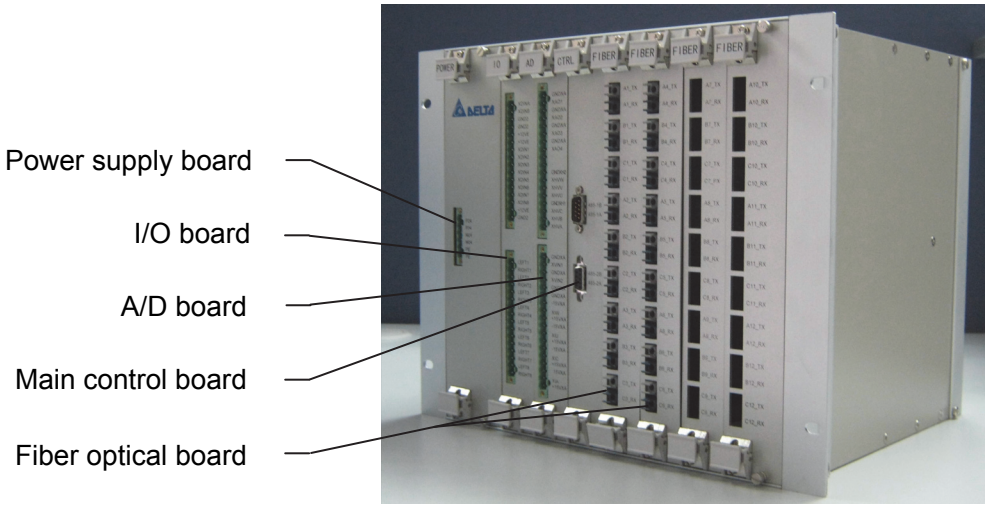

Fig. 2-3 Appearance of the main control rack

2-1-2 Power cell cabinet

The power cell cabinet is mainly used to lay out the power cell and its accessories, and its internal structure diagram is as shown in Fig. 2-4.

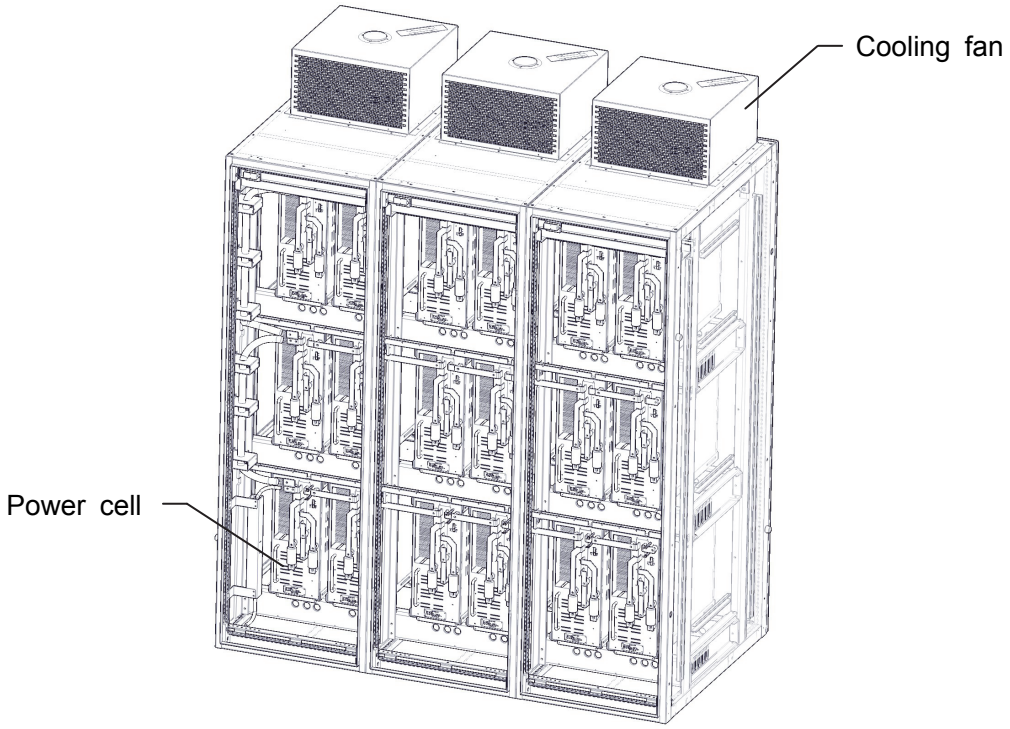

Fig. 2-4 Internal diagram of the power cell cabinet (6kV series)

Each power cell in the cabinet has the same electrical and mechanical parameters and can be replaced by each other. The appearance of the power cell is as shown in Fig. 2-5:

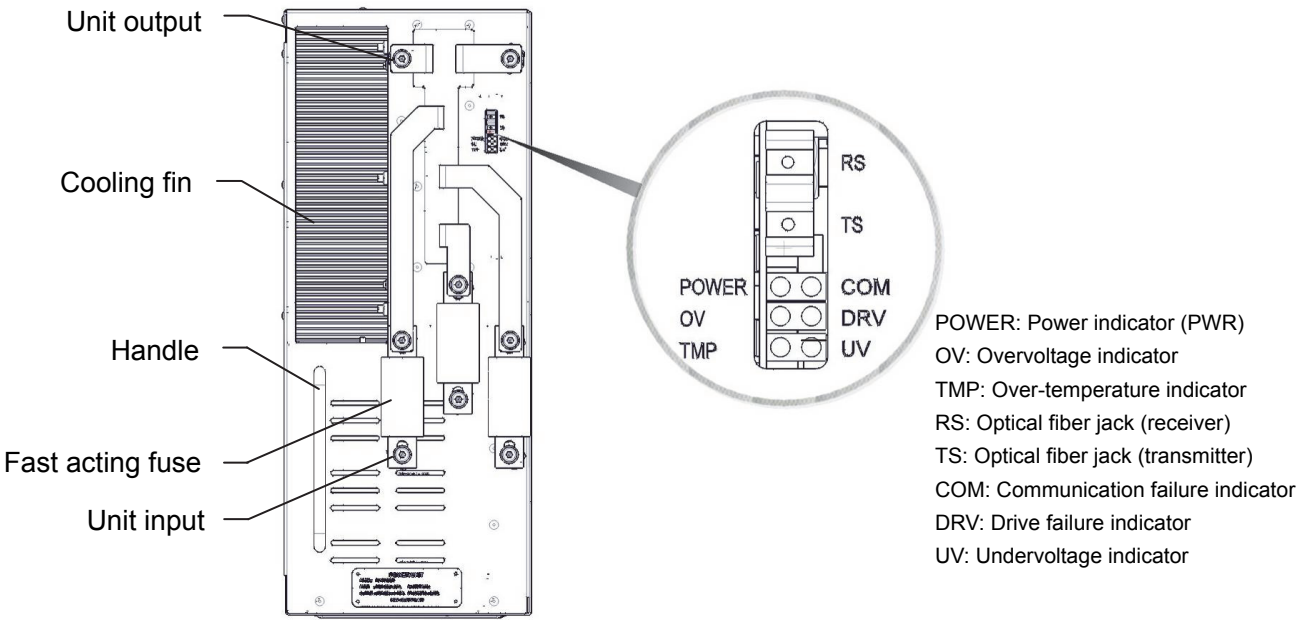

Fig. 2-5 Appearance view of the power cell (250A)

The model of the power cell is defined as follows:

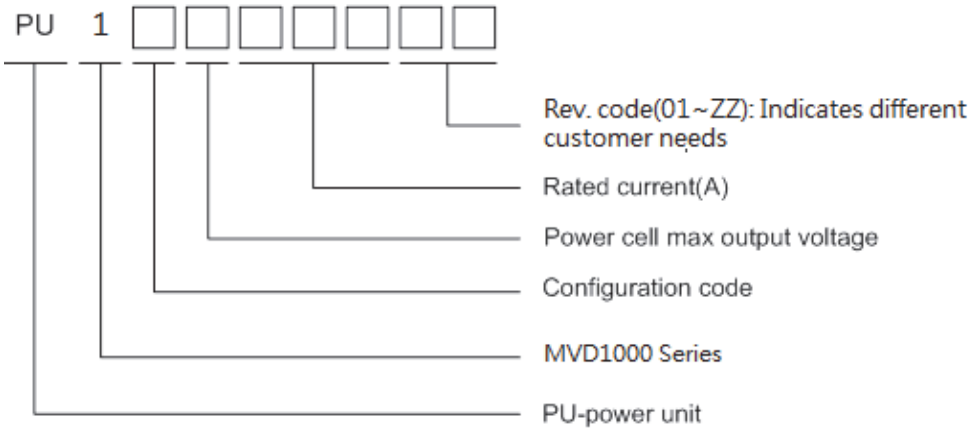

Fig. 2-6 Power cell model description

2-1-3 Transformer cabinet

The transformer cabinet is used to install phase-shift transformer and its accessories, and its internal diagram is as shown in Fig. 2-7.

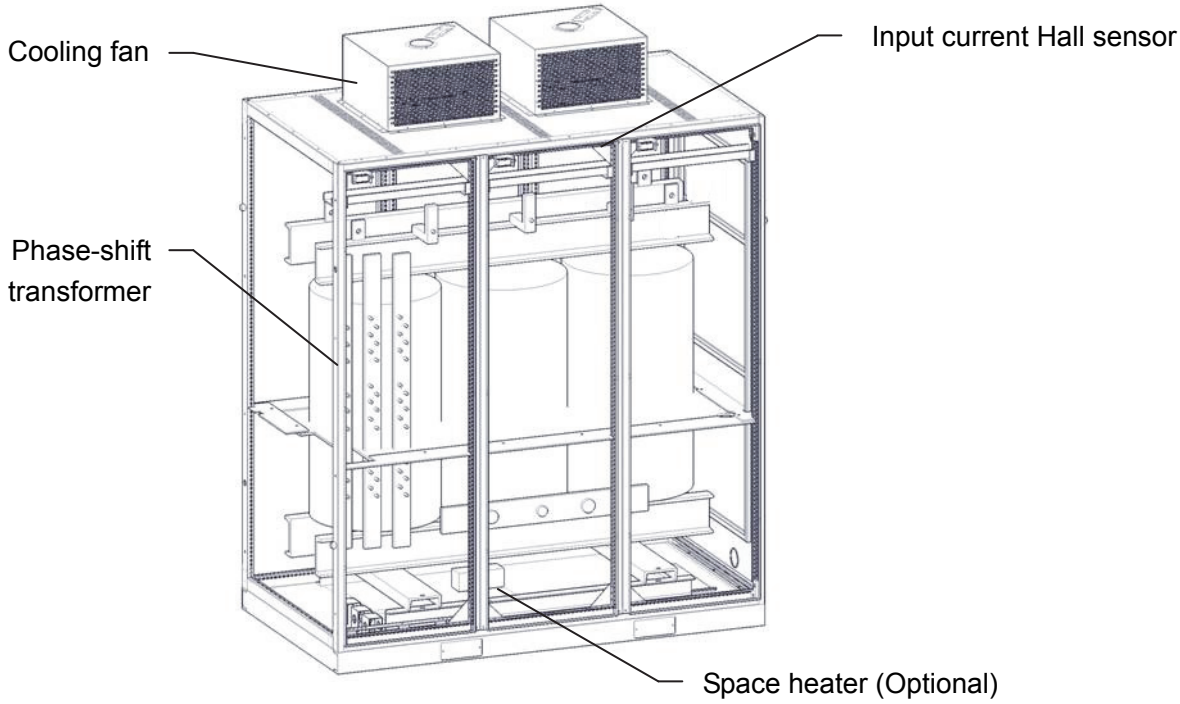

Fig. 2-7 Internal diagram of the transformer cabinet

The transformer is integrated with the cabinet base through screws for the convenience of transportation and installation. The system default setting is that, when the transformer temperature exceeds 95°C, the system will report an excessive high temperature alarm but will not shut down; when the temperature exceeds 110 °C, the system will report an extra-high temperature fault and shut down.

2-1-4 Bypass cabinet

An isolation switch is accommodated in the bypass cabinet, which on one hand realizes the electrical isolation between the phase-shift transformer and the power distribution system, and on the other hand provides the power frequency and variable frequency switching function and related electrical protection measures. Its internal structure diagram is as shown in Fig. 2-8.

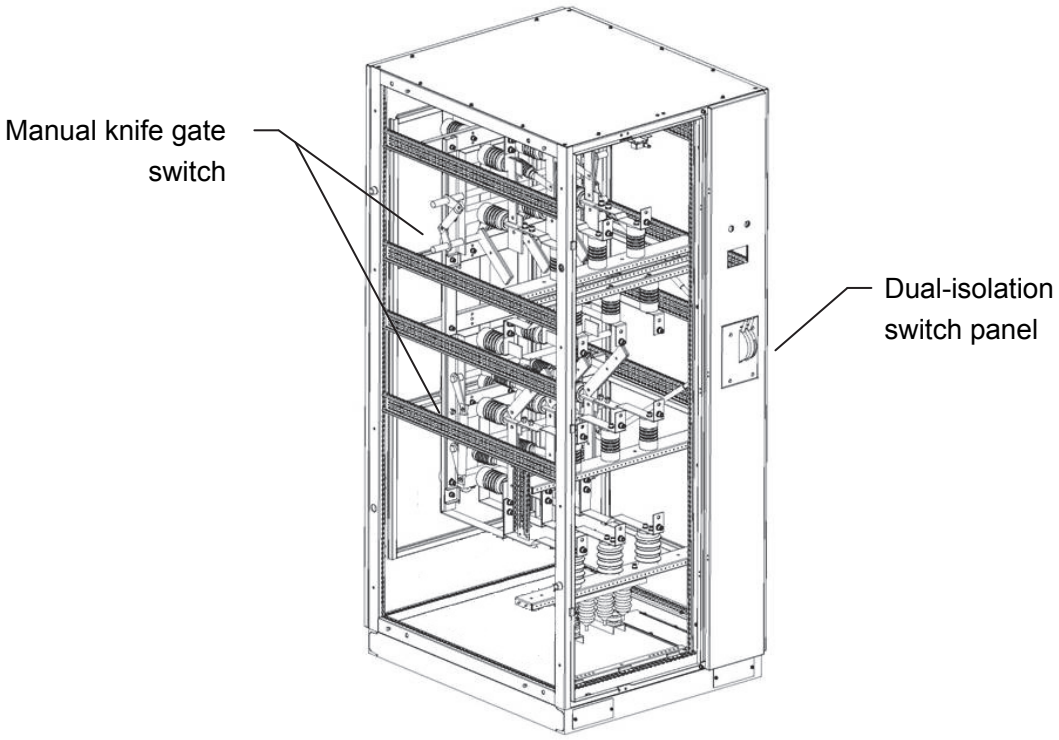

Fig. 2-8 Internal diagram of the bypass cabinet

The electrical schematic diagram of the bypass cabinet is as shown in the dashed line box in Fig. 2-9. This configuration is a typical bypass cabinet configuration, wherein QS1 is a single-pole isolation switch with manual earthing knife gate, and QS2 and QS3 are double-pole double-throw manual knife gate isolation switches. The user can choose other configurations such as automatic bypass in accordance with the requirements.

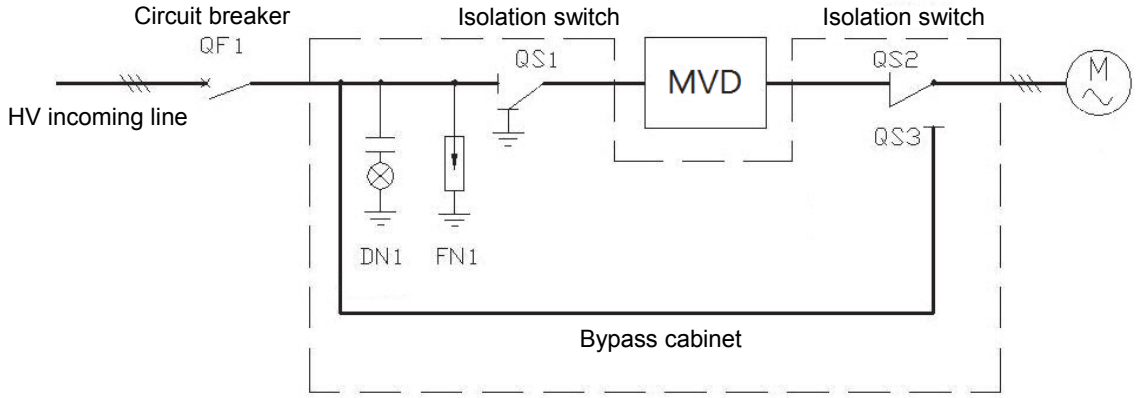

Fig. 2-9 System loop diagram

2-1-5 Optional configuration

The customer can choose other configurations in accordance with the actual demands, and the optional configurations are: startup cabinet, upper level Industrial control computer, automatic power frequency/variable frequency switching function, Profibus-DP communication adapter, industrial Ethernet communication adapter and GPRS remote maintenance function.

2-1-6 Switch and indicator on the cabinet door

1. Description of the switch and indicator of the controller cabinet

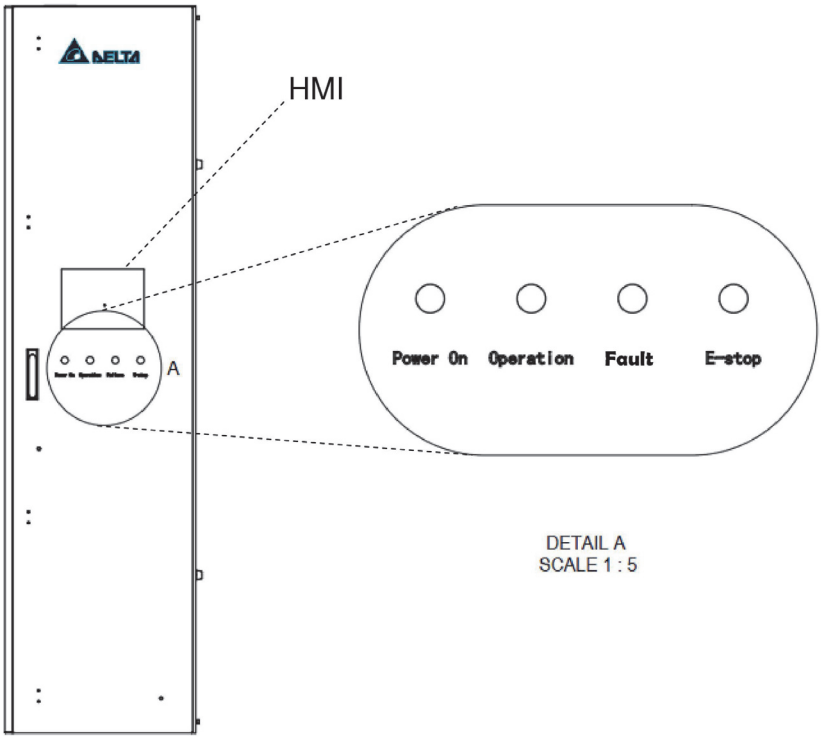

Fig. 2-10 Location diagram of the switch and indicators of the controller cabinet

As shown in Fig. 2-10:

- High voltage power-on indicator: this is a green indicator, and with the indicator in the “on” state, there is high voltage being applied to the MVD;
- Operation indicator: this is a green indicator, and when the indicator is in the “on” state, the MVD is in operation;
- Fault indicator: this is a red indicator, when the indicator is in the “on” state, the system is in “failure” state;
- Emergency stop button (E-stop): this is used to break the high voltage power of the MVD when the system has an emergency (such as unexpected incidents threatening the personnel's safety or equipment safety). This button has a self-locking function and it requires being turned clockwise to reset it for power on again.
- Human-machine interface: see Chapter III for details.

2. Description of bypass cabinet indicator

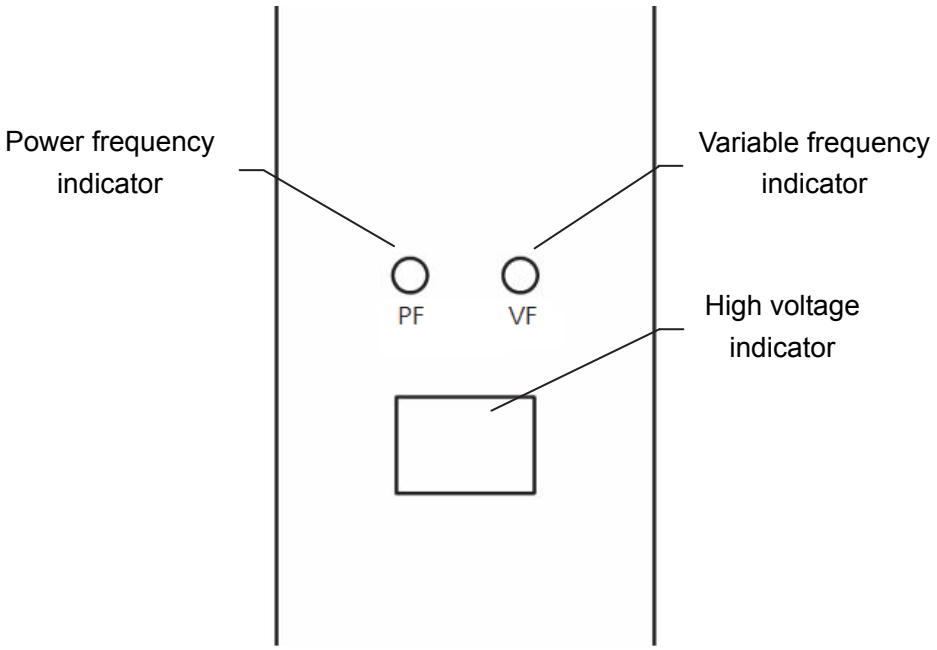

Fig. 2-11 Location diagram of bypass cabinet indicator

As shown in Fig. 2-11:

- Power frequency indicator: this is a green indicator, and when the indicator is in the “on” state, the motor is in power frequency operation;
- Variable frequency indicator: this is a green indicator, and when the indicator is the “on” state, the motor is in variable frequency operation;
- High voltage indicator: used to reflect the electrification condition of the high voltage loop in the bypass cabinet.

2-2 Principles

2-2-1 Main circuit

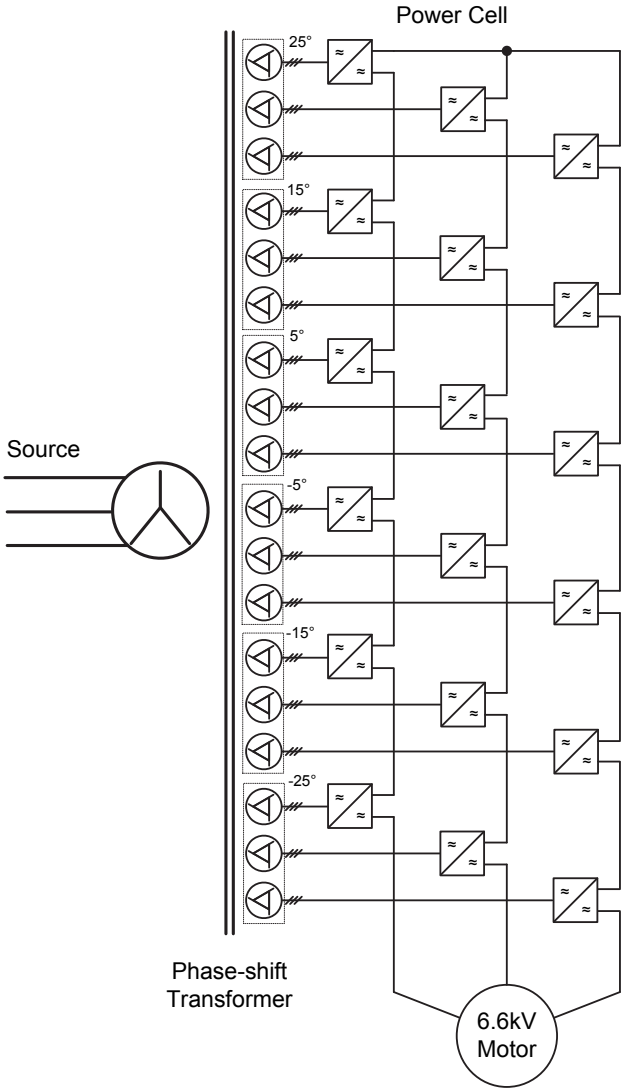

Fig. 2-12 6kV topological structure diagram

The typical circuit topological structure diagram of MVD1000 Medium Voltage Drive series is as shown in Fig. 2-12.

The phase-shift rectifier transformer is a three-phase air-cooled dry-type transformer directly connected with the incoming high voltage, whereas the secondary windings use extended DELTA connection, which can lower the content of the input side current distortion. The phase-shift angle between the secondary windings can be calculated according to the following formula:

$$Phase-shift\ angle = \frac{60°}{Number\ of\ \ power\ cells}$$

The secondary windings of the transformer provide input power for each power cell respectively. The amount of secondary windings and the phase-shift angle between the windings are determined according to the voltage level and structure of the MVD, as shown in Table 2-1.

Table 2-1 Power cell configuration table of MVD1000 medium voltage drive

MVD series	Number of power cells per phase	System cell number	Output phase voltage	Output line voltage
3.3kV	3/4	9/12	1920V	3300V
4.16kV	4/5	12/15	2400V	4160V
6kV	5/6	15/18	3480V	6000V
6.6kV	5/6	15/18	3840V	6600V
10kV	8/9	24/27	5800V	10000V
11kV	9/10	27/30	6400V	11000V

For the 6kV MVD1000 medium voltage drive series, the output voltage of a single power cell is 580 V and the single phase voltage is 3480 V, where each phase is formed by 6 power cells connected in series, and the line-to-line voltage corresponding to three-phase star connection is 6000 V. The voltage superposition diagram is as shown in Fig. 2-13.

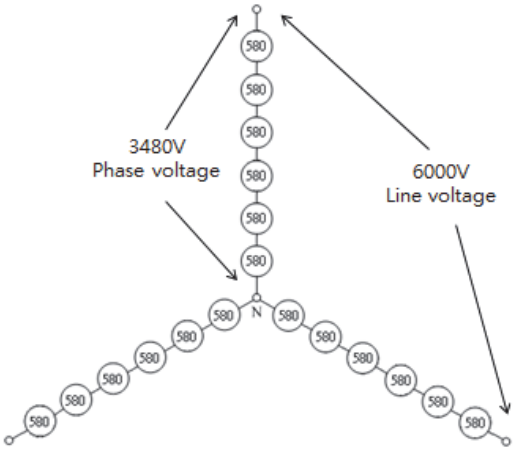

Fig. 2-13 6kV voltage superposition diagram

2-2-2 Power cell

The power cell is a basic cell of medium voltage drive for realizing variable voltage and frequency output, and the typical schematic view of its structure is as shown in Fig. 2-14. It is mainly comprised of fast acting fuses, a rectification bridge, pre-charge circuit, DC bus capacitance, IGBT inverting bridge, and etc.

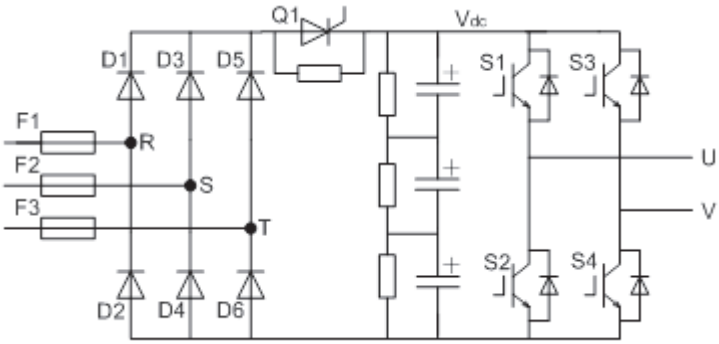

Fig. 2-14 Schematic diagram of the power cell

The input terminal of the power cell is connected with the three-phase winding of the secondary side of the phase-shift transformer, the three phase diode provides full-wave rectification to charge the DC bus capacitance, and the voltage on the capacitance is provided to the H-bridge single-phase bridge inverter circuit formed by 4 IGBTs.

The power cell receives signals by means of optical fibers, and controls the closing and opening of the S1~S4 IGBTs by using PWM modulation mode to output a single-phase impulse modulated waveform. Each cell only has three possible output states: when S1 and S4 are closed, the state of the output voltage Vuv is Vdc, when S2 and S3 are closed, the output voltage Vuv is -Vdc, and when S1 and S3 or S2 and S4 are closed, the output voltage Vuv is 0.

Fig. 2-15 shows the waveform diagram of the output voltage waveform of each power cell and the superimposed output phase voltage waveform when 6 cells are connected in series. As shown in the figure, 13 voltage levels are obtained through connecting the 6 power cells in series. The increasing number of the voltage levels reduces the distortion content of the output voltage and simultaneously lowers the risk of damaging the motor insulation caused by dv/dt. Fig. 2-16 and Fig. 2-17 are the waveform diagram of the output voltage & current of the MVD when loaded by a motor.

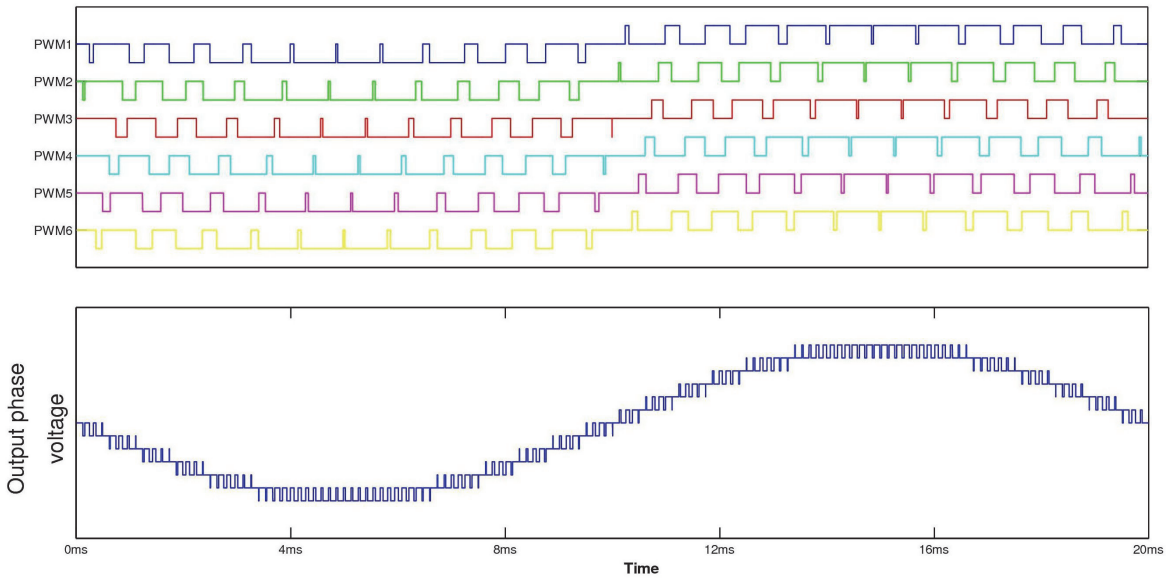

Fig. 2-15 Output & phase voltage diagram of 6kV system

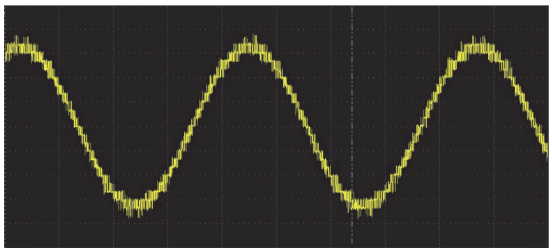

Fig. 2-16 Output line-to-line voltage waveform

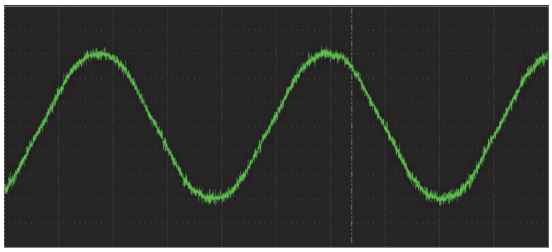

Fig. 2-17 Output current waveform

Each power cell has an independent cell control board and drive board, wherein the cell control board receives the PWM signal transmitted by the main control system by means of optical fiber to control the IGBT. Simultaneously, the status information of each power cell is fed back to the main control system by the cell control board by means of optical fiber. The drive board is used to drive the IGBT and feed back the failure signal of the IGBTs to the cell control board, such as short circuit protection.

2-2-3 Control system

The structure diagram of the control system is as shown in Fig. 2-18.

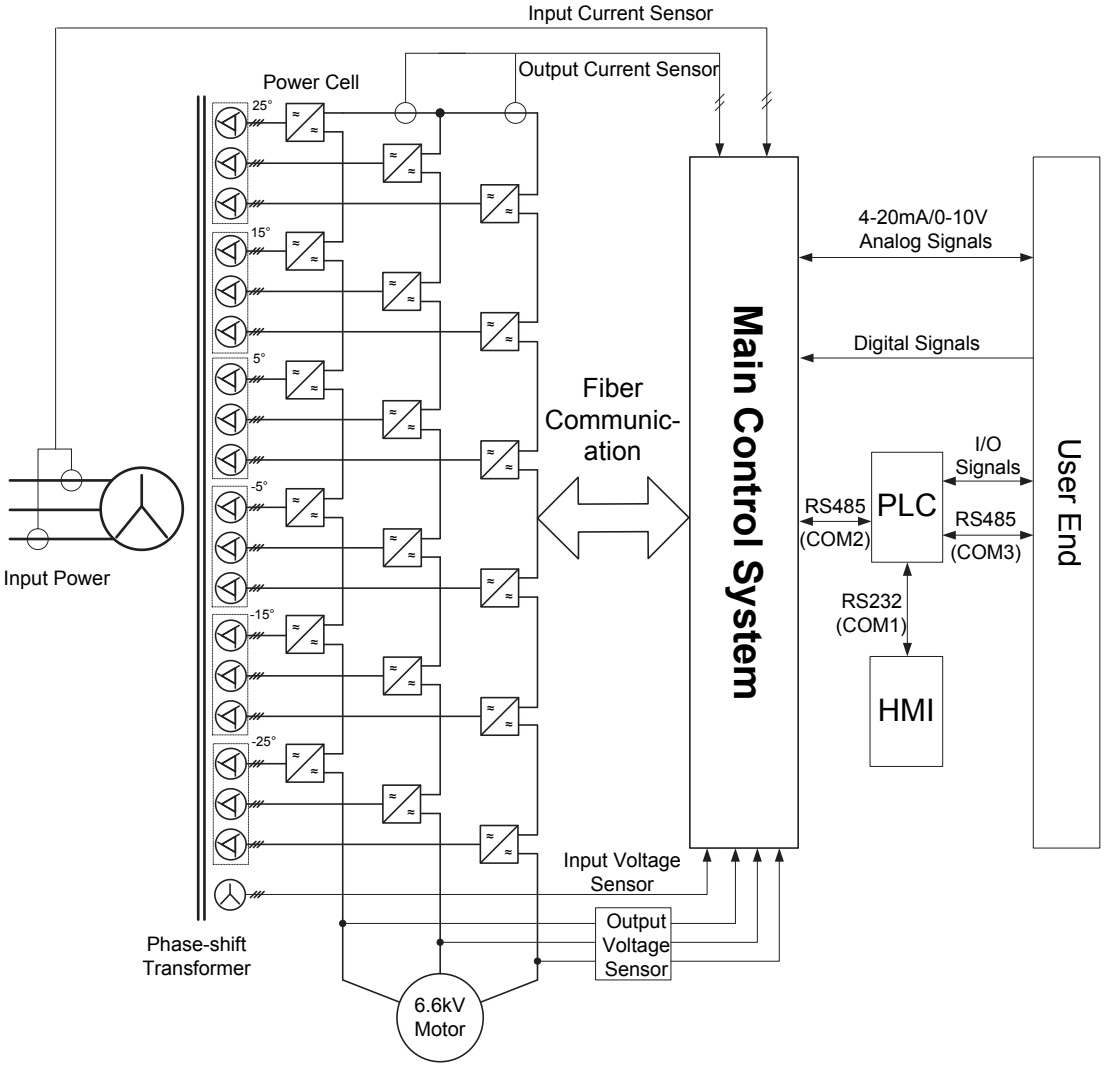

Fig. 2-18 Structure diagram of the control system (6kV)

The main functions of the main control system comprises: digital input & output, analog input & output, PWM control signal generation of each power cell, encoding and decoding of the control signal, system self-diagnosis, delivery of various implementation instructions, collection and handling of various failures, communication with external systems, and etc.

A PLC (Programmable Logic Controller) is used for the logical processing of the internal switching signals, site operation signal and status signal of medium voltage drive, thus enhancing the flexibility at the site application. The MVD1000 medium voltage drive products uses a high-quality PLC to accomplish the input & output MVD signal control, protection and interlocking, external failure detection, communication with the main control system and control of the human-machine interface.

The HMI (Human-machine interface) is based on a high definition liquid crystal touch-type screen. It is easy to operate and is mainly used to set functional parameters, display and record the system status, operation status and failures through the connection to the PLC. Specific contents will be described in Chapter III in detail.

III. Human-machine interface

By using a high-quality touch-screen HMI (human interface machine), simple and visual operation are possible to achieve for all MVD function such as parameter setting, operation status, and fault diagnosis. The user interface is protected by password function that only opens up for authorized operators to ensure the safety of operation.

3-1 HMI main interface

The HMI main interface is as shown in Fig. 3-1.

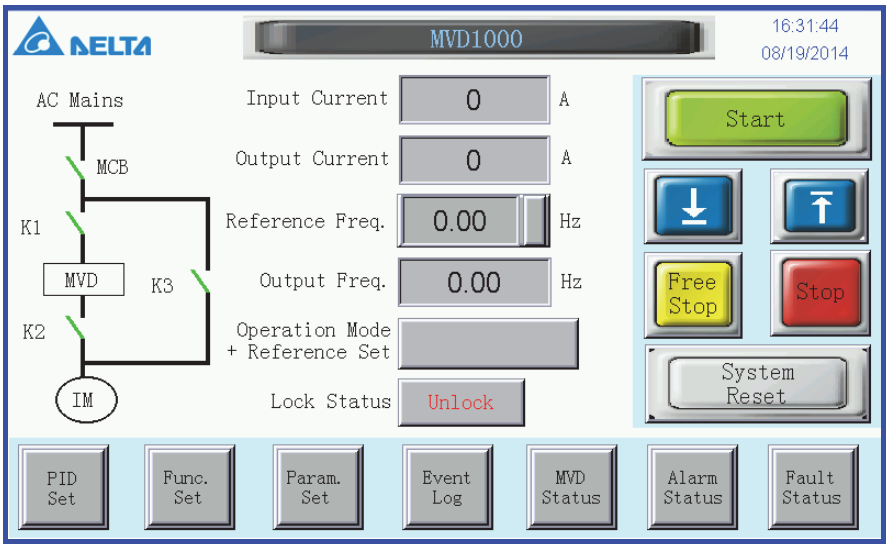

Fig. 3-1 HMI main interface

The main interface can directly display the input current, output current, reference frequency, output frequency, operation mode and password state, and the user can conduct speed setting, start, stop and system reset on the MVD by means of the main interface. The functions of each key in the main interface will be described hereinafter:

	Under HMI operation mode, a “start” order can be sent to the MVD by pressing this key. When the MVD is in operation, this key is disabled. If the MVD is in deceleration stop state or stop state, the key can be pressed to restart the MVD.
	When the frequency setting is done via HMI, the reference frequency can be reduced by pressing this key. The frequency will reduce by 1Hz when this key is touched once, and when pressing this key continuously, the frequency will reduce continuously.
	When the frequency setting is done via HMI, the frequency can be increased by pressing this key. The frequency will increase by 1Hz when this key is touched once, and when pressing this key continuously, the frequency will increase continuously.
	Under HMI operation mode, the MVD can be shut down freely by pressing this key.

Stop	Under HMI operation mode, the MVD can be shut down at a decelerating frequency by pressing this key.
System Reset	This key is used to reset the MVD to the initial state, and will come into effect in 10s after the system is powered on. When the MVD has a failure, it will enter into failure protection state automatically to prohibit the main power of the MVD from closing and restart. If the failure is eliminated, press this key to eliminate the failure state to restore the system to the normal standby mode. When the system is in operation, this key is invalid.
PID Set	For setting parameters of the internal PID controller, see 3-2 for details.
Func. Set	With respect to the selection of function setting of the drive, see 3-3 for details.
Param. Set	For the parameter setting of the drive and motor, see 3-4 for details.
Event Log	Display the data record of the drive when it is in operation. See 3-5 for details.
MVD Status	Display the input & output current, voltage, power and frequency of the drive when it's in operation. See 3-6 for details.
Alarm Status	When the system has an alarm, this key will flicker, and the specific alarm information can be seen by pressing this key. See 3-7 for details.
Fault Status	When the system has a fault, this key will flicker, and the specific major failure information can be seen by pressing this key. See 3-8 for details.

3-2 PID setting

Press PID Set on the HMI to enter into the PID setting display interface, as shown in Fig. 3-2. PID functions are available only if AD switch module is selected and under the mode of "HMI+HMI."

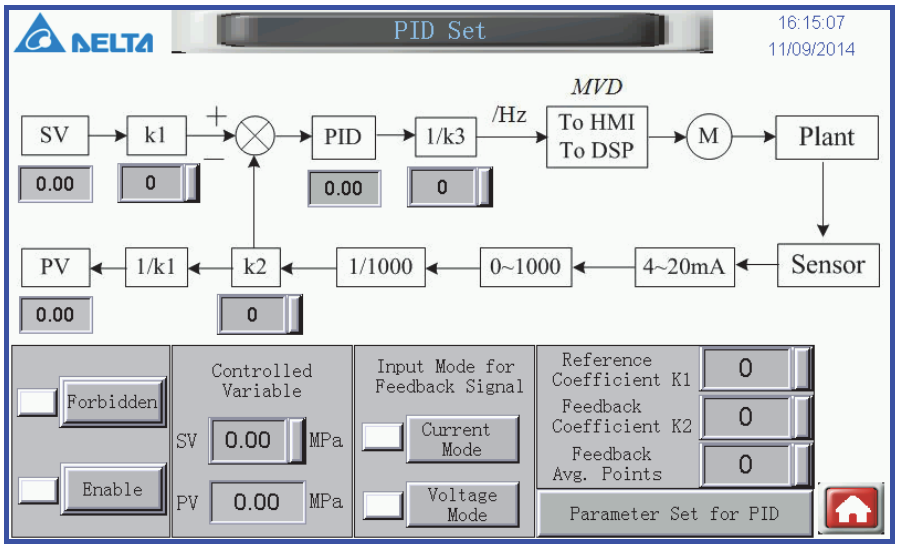

Fig. 3-2 PID setting interface

This GUI page displays a simple PID control flow and some parameter sets, which include:

- ✧ Switches enable/forbidden
- ✧ Controlled Variable SV: the expected values of user set
  PV: the real value of system output
- ✧ Input Mode for Feedback Signal: Signal types from system feedback can be divided into current signal (4~20mA) and voltage signal (0~10V)
- ✧ Reference Coefficient K1: a calculated internal coefficient of PID functions, set according to the actual conditions
- ✧ Feedback Coefficient K2: a calculated internal coefficient of PID functions, set according to the actual conditions
- ✧ AD Input Frequency (Avg. Points): the number of AD module sampling, equaling input signal filter function, and the frequency can be set between 1 to 10 due to the actual conditions
- ✧ Parameter Set for PID: Press the button to access next PID interface for detailed parameter settings

Note: All the operations described above will only be available after “Enable” is activated, the initial default set is “Disable!” Afterwards this parameter will maintain the previous set after power off.

Press “Parameter Set for PID” button to access the GUI page, shown as figure 3-3.

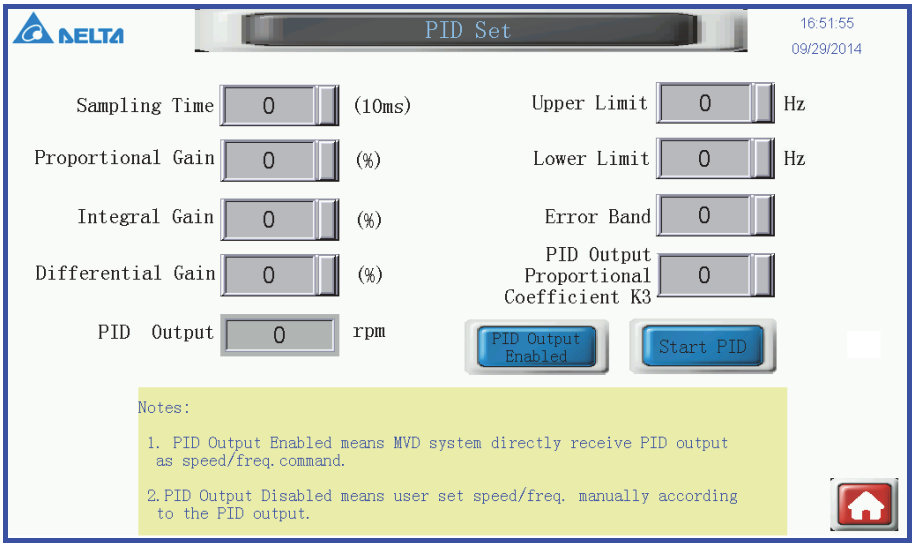

Fig. 3-3 PID setting interface

This GUI page displays PID detailed parameter sets, which include:

- ✧ Sampling Time: Time of PID sampling the feedback signal, unit: 10ms, set range: 1~2000.
- ✧ Proportional Gain: magnified proportional value of SV-PV error, unit: %, set range: 0~30000.
- ✧ Integral Gain: magnified proportional value of an accumulation of each sampling time unit times the error value, unit: %, set range: 0~30000.
- ✧ Differential Gain: magnified proportional value of an error variable of each sampling time unit, unit: %, set range: 0~30000.
- ✧ PID Output: display of the actual PID output results.
- ✧ Upper Limit: if output value is greater than this set value, then the actual value will be limited and set to this default, set range: 0~4500.
- ✧ Lower Limit: if output value is smaller than this set value, then the actual value will be limited and set to this default, set range: 0~4500.
- ✧ Error Band: error value is equal to SV-PV deviation, this function is forbidden when this value is set at 0. Ex.: if the set value is 5, then the output value will be 0 of an error value between -5 to 5.
- ✧ Start PID: After all the PID parameter sets above are done, press this button to apply these PID functions, and another GUI page will show up after the implementation, just as shown as figure 3-4.
- ✧ PID Output Enabled: MVD system will receive PID output value as an execution command directly if this button shows “PID Output Enabled;” press this button to change to manual calibration, and user will set the system execution command by himself according to the actual PID output value.

Note: All the parameters will maintain the same even the power is off.

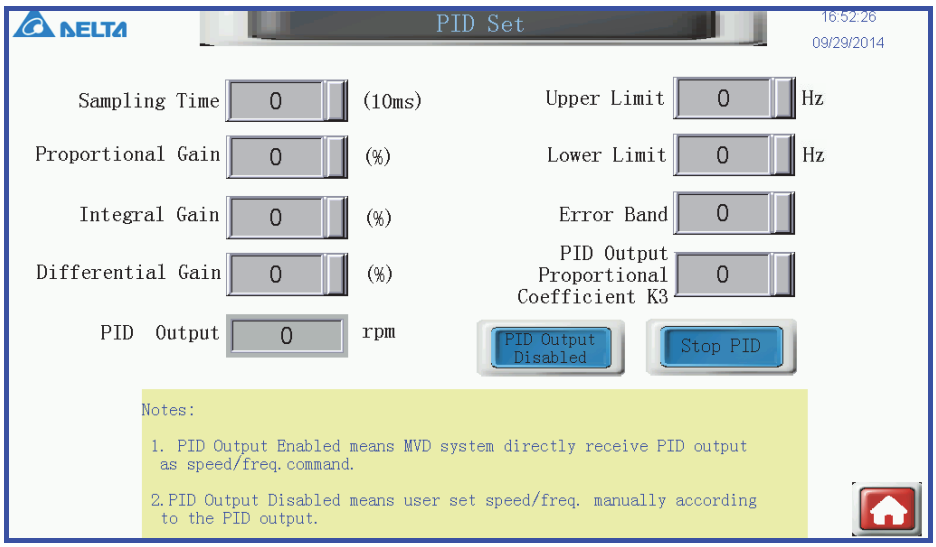

Fig. 3-4 PID setting interface

Note: This PID function does not support online parameter calibration, user might need to press Stop PID to shut down PID, then press Start PID button only after the calibration is done, if he wants to modify the parameters of this interface.

3-3 Function setting

Press Func. Set in the HMI main interface to enter into the function setting interface, as shown in Fig. 3-5.

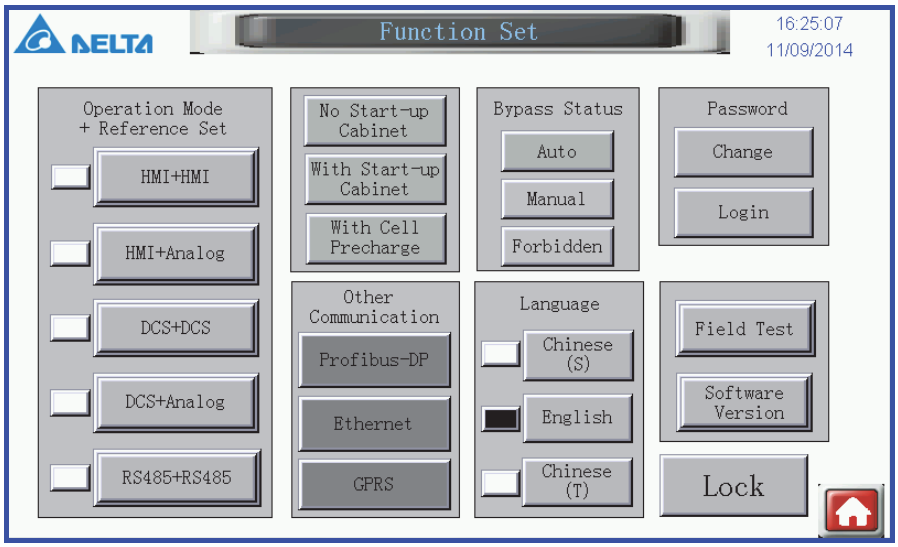

Fig. 3-5 Function setting interface

This interface can be used to conduct setup in the operation mode + reference set mode, control mode, communication mode, bypass status, password and language selection.

- Operation mode + Reference set
  - ✧ HMI + HMI: Enables frequency setting directly via HMI and equipment operation by means of HMI and the emergency stop button on the cabinet door;

- ✧ HMI + Analog: Enables frequency setting by means of analog input and equipment operation by means of HMI and the emergency stop button on the cabinet door;
- ✧ DCS + DCS: Operates the equipment and reference frequency by means of DCS (DCS refers to the remote digital control of the MVD, and for the specific interface definition, see Chapter VII - System wiring - Fig. 7-5);
- ✧ DCS + Analog: Operates the equipment by means of DCS and reference frequency by means of the analog input;
- ✧ RS485 + RS485: Achieves system control and enables frequency setting by means of RS485 communication. For the specific RS485 order format, see Annex B - MODBUS Communication Protocol.

- Control mode:

  The user can choose the proper control mode according to different load types.

  - ✧ V/F: Enables the MVD to control the motor operation according to the constant voltage and frequency method through directly setting the frequency. It is applicable to variable torque loads, such as fans and pumps;

  1. Multipoint V/F: It can set several points (inflexion) corresponding to the motor stator voltage and frequency control in the operation characteristics of the motor. It is applicable to some special occasions, for example high inertia system soft startup and low-speed high-torque application cases. For the specific application, see Chapter IV - Description of functional parameters.

- Other communication selection (optional)
  - ✧ Profibus-DP: When the PROFIBUS communication function is configured in this system, it can be used by pressing this key;
  - ✧ Ethernet: When the Ethernet communication function is configured in this system, it can be used by pressing this key;
  - ✧ GPRS: When the GPRS communication function is configured in this system, it can be used by pressing this key.

- Bypass Status:
  - ✧ Auto: auto mode to switch to frequency running. (subject to select auto bypass cabinet)
  - ✧ Manual: manual mode to switch to frequency running. (manual or auto bypass cabinet)
  - ✧ Forbidden: forbidden to switch to frequency running. (subject to select auto bypass cabinet)

- Language selection

  Several languages such as English, Simplified Chinese, and Traditional Chinese are available, and the user can choose the proper language style according to the needs.

- Password

Click 

to bring up the dialogue box, as shown in Fig. 3-6. If the password input is wrong, the dialogue box will remain until the password input is right.

The original password will be provided to the user when the product is delivered.

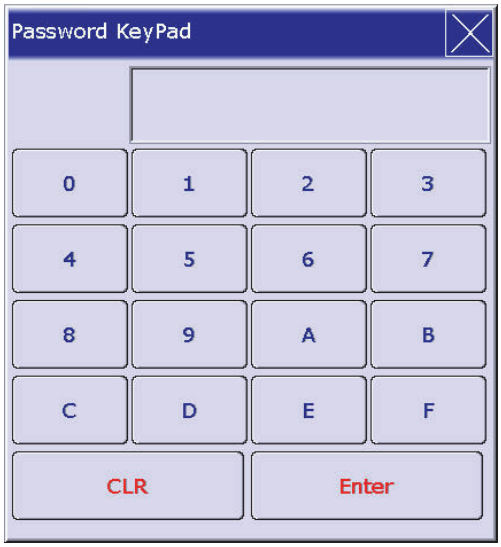

Fig. 3-6 Input password

The MVD has 3 user authority levels, which restrict important parameter changes by users without authority to prevent malfunction. Users at a higher level can see and change the password of the user at a lower level.

Level 1 operation authority comprises keys in the main interface (excluding control mode selection in the function setting interface, password resetting and the resetting key in the Event Log interface) and Level 1 parameter change.

Level 2 operation authority comprises all the keys in the main interface and Levels 1 and 2 parameter change.

Level 3 operation authority comprises all the keys in the main interface and the Levels 1, 2 and 3 parameter change.

Users at different levels can carry on corresponding operation on the system after entering the right password, click the "password locking" key and exiting the loading after finishing the operation. If the user forgets to exit the loading manually, the system will be locked automatically in 5 minutes.

Click  to go back to the main interface.

3-4 Parameter setting

Press 

in the HMI main interface to enter into the parameter setting interface, as shown in Fig. 3-7.

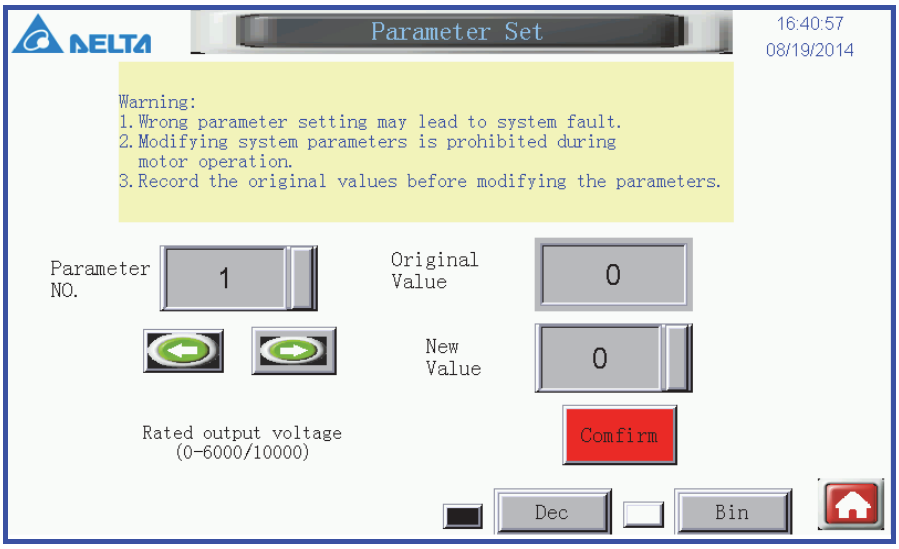

Fig. 3-7 Parameter setting interface

The function of this interface is to display and change the parameters. The parameter change cannot be conducted when the MVD is running. Each parameter of the MVD corresponds to a function number. For MVD 1000 series, please see Annex A. MVD1000 functional parameters table for details. The user can change the parameters according to the actual site situation.

3-5 Event log

Press 

on the HMI to enter into the event log display interface, as shown in Fig. 3-8.

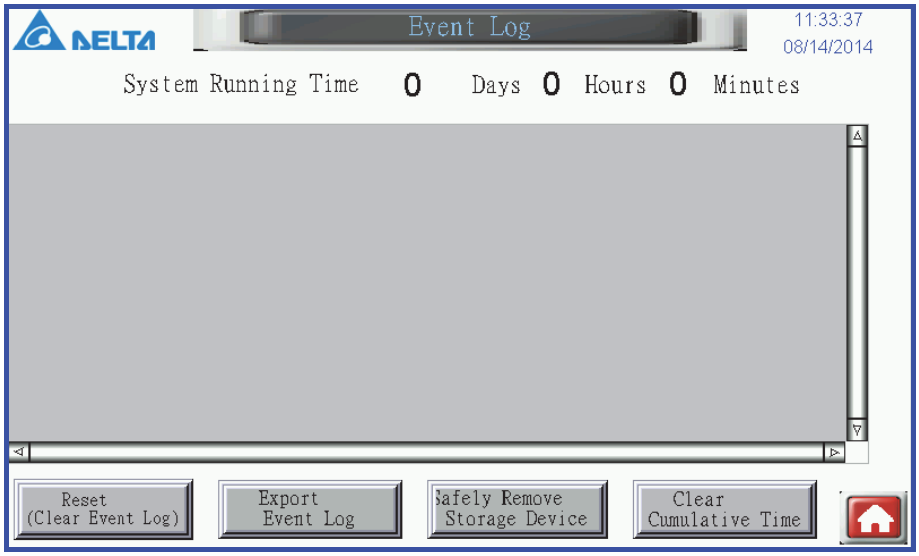

Fig. 3-8 Event log interface

This interface aims at recording all the events about alarms, faults, equipment start-up and shut-down to the logs, which will raise the efficiency of troubleshooting, leading it to be more convenient for customer to maintain.

“Reset (Clear Event Log)” button is used for clearing the logs displayed in this

interface. This function will be executed after clicking “Confirm” in the dialogue box.

User can insert a flash drive into the USB port in the back of HMI, then press “Export Event Log” to export the event log to the drive.

Press “Safely Remove Storage Device” after export is done, then remove the flash drive.

All system running time is recorded in this interface; press “Clear Cumulative Time” can eliminate the log.

3-6 MVD status

Press 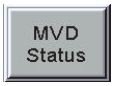

on the HMI main interface to enter into the status monitoring interface, as shown in Fig. 3-9.

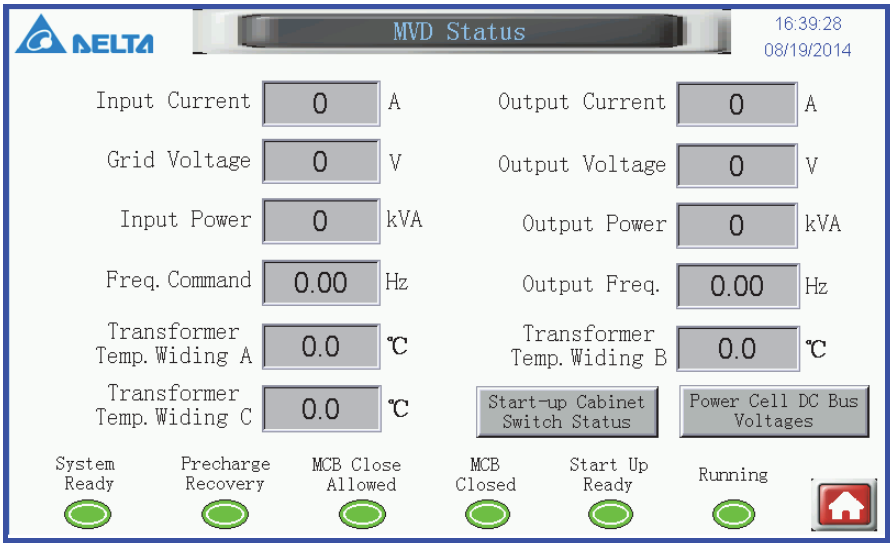

Fig. 3-9 MVD status interface

This interface can be used to display the input & output state during the operation of the MVD in real time. The lower part of the interface indicates the operation state of the MVD. When the system is in a specific state, the indicator of this state turns to red from green. The specific description is as follows:

System ready: The “system-ready” indicator flickers when the system has no fault or communication error, the cabinet door is closed, the emergency stop button is unlocked, the control power is ready, K1 and K2 are closed, and K3 is open.

MCB close allowed: After the system is ready, but the high voltage breaker is not closed, the transmission of the closing allowed signal will be delayed for 3 seconds, namely the “MCB close allowed” indicator will flicker.

MCB closed: When the input high voltage breaker is closed, the “MCB closed” indicator flickers.

Start-up ready: if there is a delay of 10 seconds after the high voltage power is turned on, the DSP will transmit the “operation request” signal after transmitting the main control ready state. At this time, the “Start Up Ready” indicator will flicker.

Running: When the main control system has no failure, and the system detects the

operation in normal operation, the “Running” indicator will flicker.

Press “Power cell DC bus voltages” to enter into the cell bus voltage display interface, as shown in Fig. 3-10. This interface can be used to view the bus voltage information of each power cell.

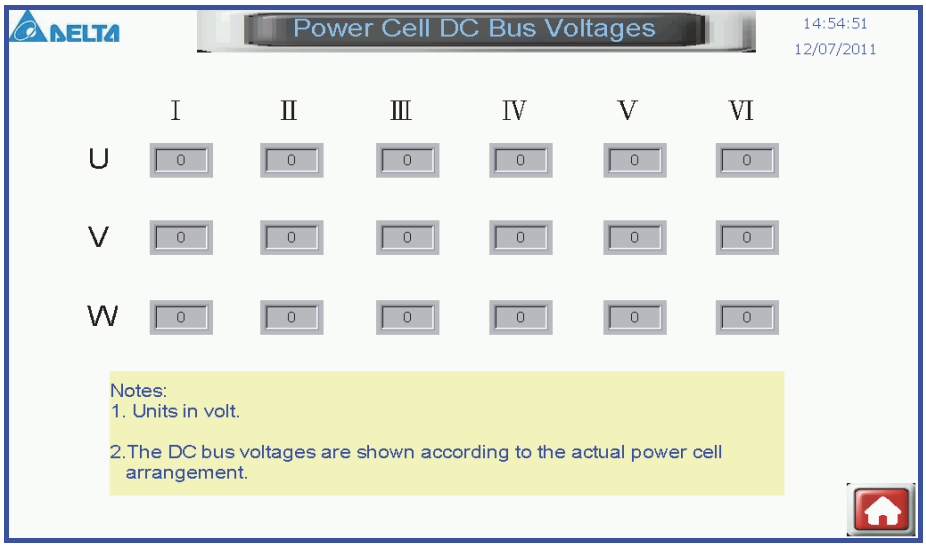

Fig. 3-10 Power cell bus voltages interface (for 6 kV)

3-7 Alarm status

Press 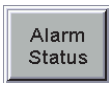

on the HMI main interface to enter into the alarm status failure display interface, as shown in Fig. 3-11.

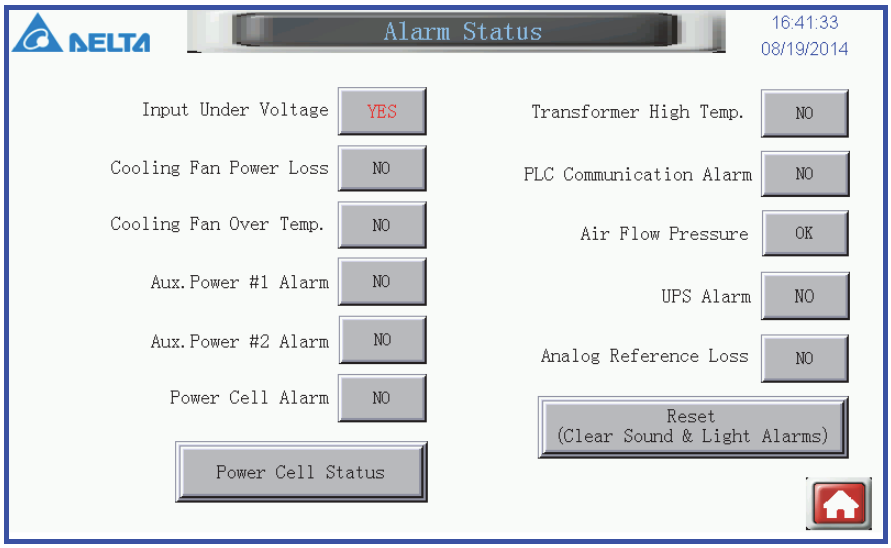

Fig. 3-11 Alarm status interface

This interface displays the alarm status of the MVD during operation. When any one of the failures occur, the system will send warnings such as audible and flash light (installed on the top of the control cabinet – optional) , and will bring out a popup window about the failure (as shown in Fig. 3-12).

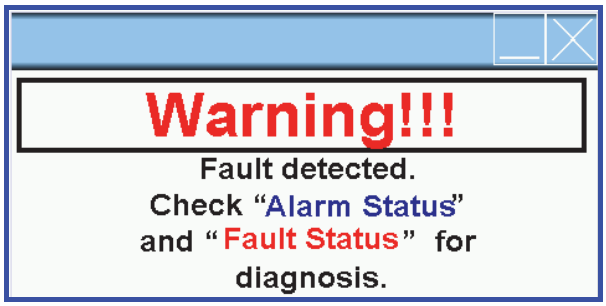

Fig. 3-12 Alarm and Fault prompt box

The "Reset" key is used to eliminate the audible and flash light warnings (if configured). If new alarm occurs, the audible and flash light warnings will appear again.

Press the "Power cell status" key to enter into the power cell failure display interface, as shown in Fig. 3-13. This interface can be used to view the specific position and types of the failure occurring in the power cell.

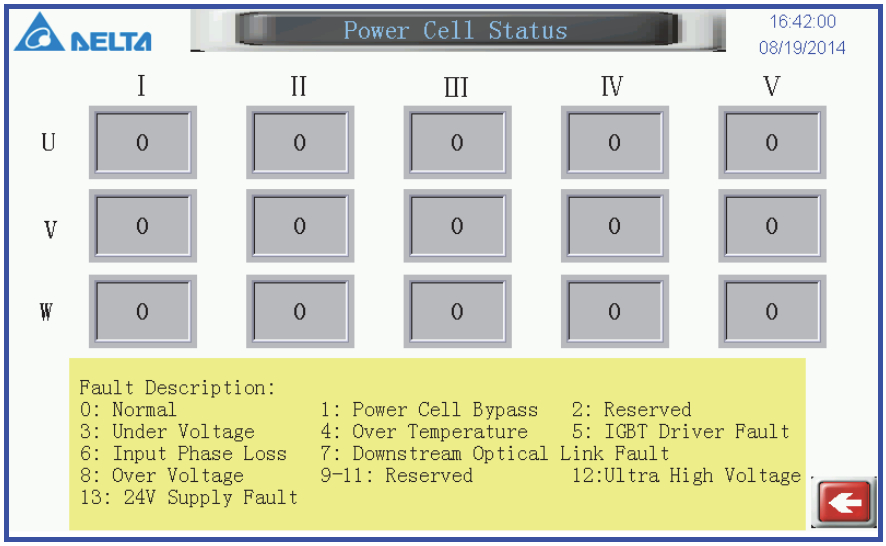

Fig. 3-13 Power cell status interface

3-8 Fault status

Press 

in the HMI main interface to enter into the fault status interface, as shown in Fig. 3-14.

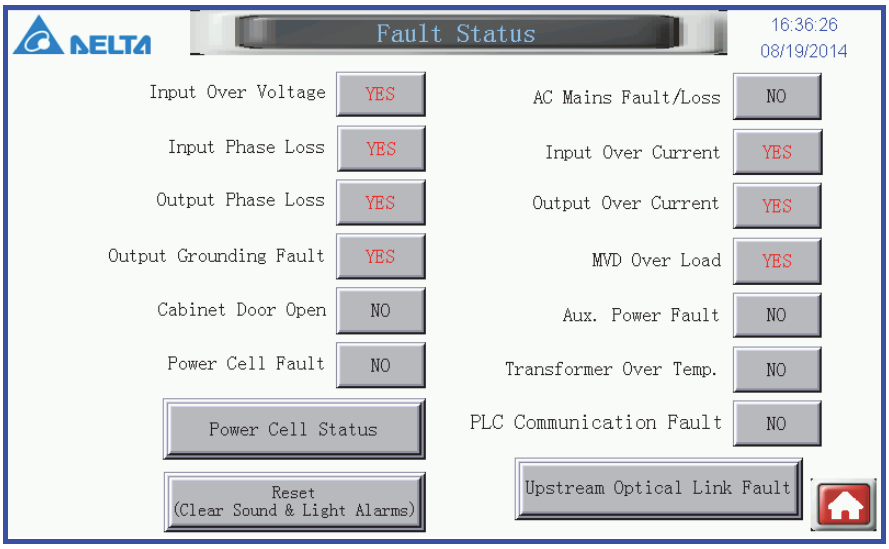

Fig. 3-14 Fault status interface

This interface displays the fault status of the MVD during operation, when any one of the failures above occur, the system will send audible and flash light signals, bring out a failure prompt box (as shown in Fig. 3-12) and give a high-voltage disconnection command.

The “Reset” key is used to eliminate the audible and flash light warnings caused by faults in this interface (if configured).

Press the “Power cell status” key to enter into the power cell status display interface, as shown in Fig. 3-13.

Press the “Upstream optical link fault” key to enter into the system optical fiber communication failure display interface, as shown in Fig. 3-15. The specific cell position of the system optical fiber communication failure can be viewed from this interface.

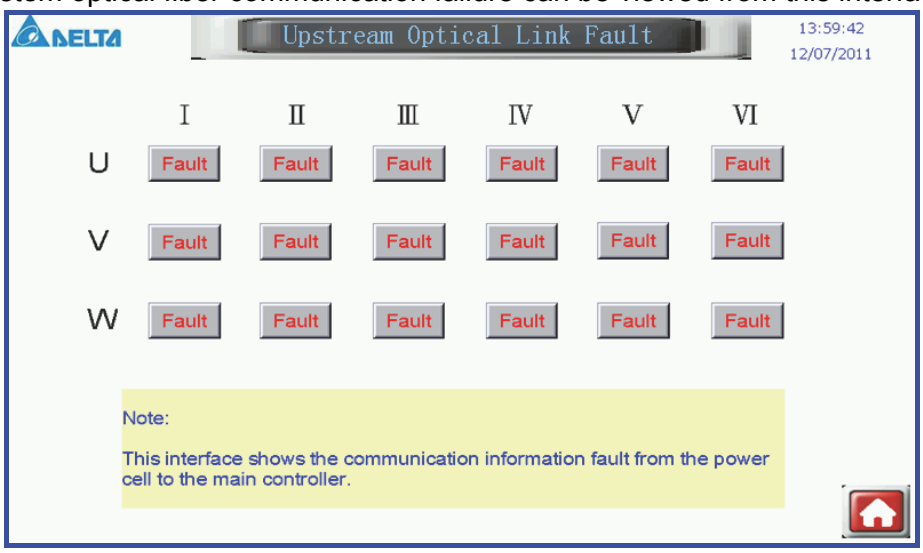

Fig. 3-15 Upstream optical link fault interface

IV. Description of functional parameters

4-1 Control parameters

Function No.	Description	Min	Max	Default	Unit
P0004	Torque boost voltage (effective value of line voltage)	0	800	0	V

- Torque boost is used to increase the output voltage during low-frequency operation and improve the low-frequency torque characteristics of V/F control.
- The setting range of the torque boost voltage is 0~800V (effective value of line voltage). When the set value is 0, there is no increase, but when the set value is 800V, the increase range is maximum.

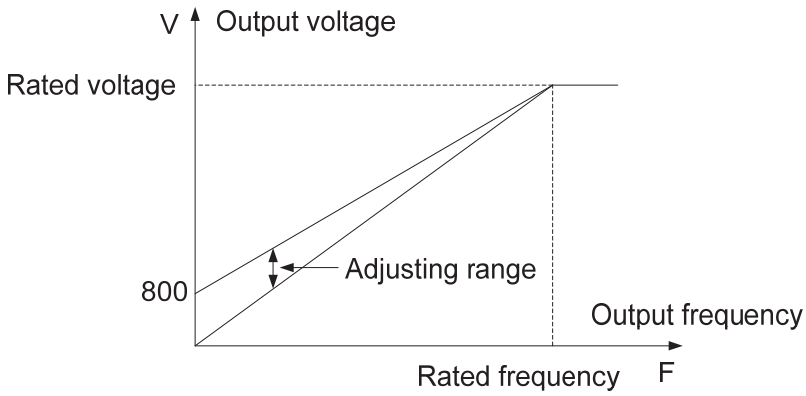

Fig. 4-1 Torque boost

Caution!

◆ If the torque boost force is too great, it may lead to the overcurrent output of the MVD and cause the system to enter overcurrent protection. The torque boost value shall be set according to the actual load.

Function No.	Description	Min	Max	Default	Unit
P0013	Rotation direction of the motor: 0-forward 1-reverse	0	1	0	—

- It is used to set the rotation direction of the motor, and shall be selected according to the actual working condition.

Function No.	Description	Min	Max	Default	Unit
P0031	AVR function enabled: 0-disabled 1-enabled all the time	0	1	1	—

- AVR function refers to the automatic adjusting function of the output voltage: when the AVR function is disabled, the output voltage will change with the change of the input voltage (or the DC bus voltage); when the AVR function is enabled, the output voltage will not change with the change of the input voltage (or the DC bus voltage), and the output voltage will basically keep constant within the normal input voltage variation range.

Function No.	Description	Min	Max	Default	Unit
P0057	Acceleration time (0Hz~rated frequency)	0	3000	60	Second
P0058	Deceleration time (rated frequency~stop)	0	3000	60	Second

- Acceleration time: the time required by the MVD to increase the output frequency from 0Hz to rated frequency.
- Deceleration time: the time required by the MVD to decrease the output frequency from rated frequency to 0Hz.

Caution!

- ◆ When the deceleration time is set too short, it may cause the DC bus voltage to increase and more seriously, cause an overvoltage failure of the power cell.
- ◆ The user shall set proper acceleration & deceleration time according to the rotation inertia of the induction motor and load.

Function No.	Description	Min	Max	Default	Unit
P0061	Minimum setting time for increasing & decreasing frequency (0Hz~rated frequency)	0	3000	60	Second

- Time limit for increasing & decreasing frequency: limit the shortest acceleration & deceleration time of the MVD output frequency. If the set values of P0057 and P0058 are less than the parameter value, the program will automatically revise P0057 and P0058 to parameter value.

Function No.	Description	Min	Max	Default	Unit
r0071	Reference frequency	0	7500	—	0.01Hz

- The function number is used to display the operation frequency information set by the user. The information is read-only information without default.

Function No.	Description	Min	Max	Default	Unit
P0078	Frequency skipping point 1	100	7500	1500	0.01Hz
P0079	Frequency skipping point 2	100	7500	2500	0.01Hz
P0080	Frequency skipping point 3	100	7500	3500	0.01Hz

Function No.	Description	Min	Max	Default	Unit
P0081	Bandwidth of frequency skipping point 1	0	2000	0	0.01Hz
P0082	Bandwidth of frequency skipping point 2	0	2000	0	0.01Hz
P0083	Bandwidth of frequency skipping point 3	0	2000	0	0.01Hz

- The frequency skipping function is used to avoid the system mechanical resonance point.

A total of 3 frequency skipping points are configured and two parameters are required to be configured to each skipping point, namely the frequency central point and the skipping frequency bandwidth, as shown in Fig. 4-2. When the reference frequency is within the frequency skipping area, the system will automatically adjust the frequency to the upper limit value of the frequency skipping.

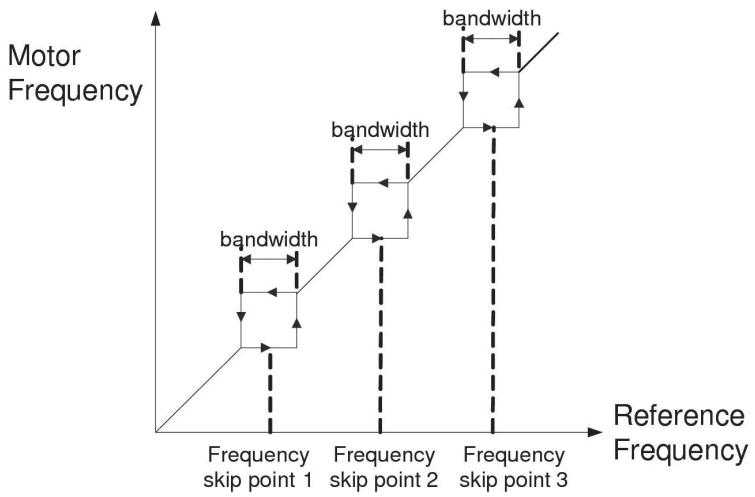

Fig. 4-2 Frequency skipping

Function No.	Description	Min	Max	Default	Unit
P0119	Speed measurement function enabled: 0-digital input channel DIA and DIB are used as common digital input and respectively corresponding to function numbers P109 and P110. 1-digital input channel DIA and DIB are used as speed measurement impulse input.	0	1	0	—

- If the closed loop control of the motor speed is implemented by means of a photoelectric encoder, this function shall be started and the impulse input interfaces A and B of the photoelectric encoder shall be connected with the corresponding digital interface. See related description in P0109 and P0110 for specific applications.

Function No.	Description	Min	Max	Default	Unit
r0145	Current frequency setting mode	0	2	—	—

- The function number is used to display the current frequency setting mode information. The information is read-only without default.
  0: PLC frequency setting
  1: AI frequency setting
  2: DI frequency setting

Function No.	Description	Min	Max	Default	Unit
P0150	Multipoint V/F control: frequency point 1	100	7500	1000	0.01Hz
P0151	Multipoint V/F control: voltage point 1	0	13200	1600	V
P0152	Multipoint V/F control: frequency point 2 (higher than Frequency point 1)	100	7500	3000	0.01Hz
P0153	Multipoint V/F control: voltage point 2 (higher than Voltage point 1)	0	13200	5000	V

- When the control mode is selected to be multipoint V/F, the function numbers above are used to set the voltage and frequency corresponding to the V/F curve inflexions. For the setting method, see Fig. 4-3 as a reference.

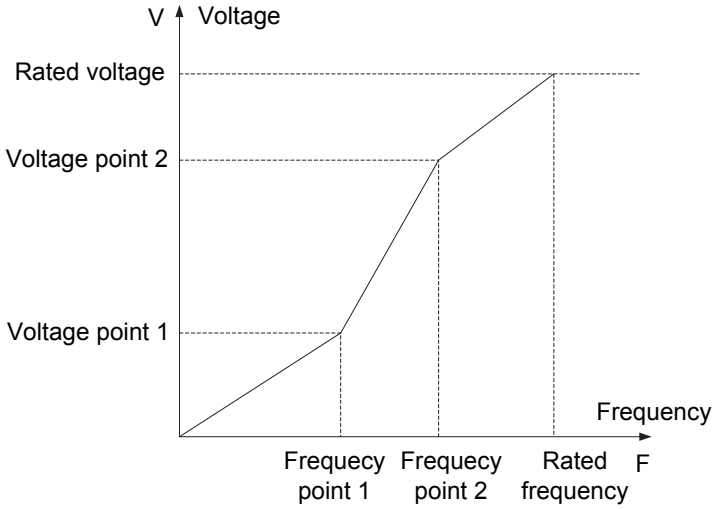

Fig. 4-3 Multipoint V/F control

Function No.	Description	Min	Max	Default	Unit
P0160	Startup types: 0-normal startup 1-flying startup	0	1	0	—

- The flying start function refers to the startup conducted by the user under the condition that the load motor is not in a static state.

When the flying start function is selected, the MVD can automatically detect and control the current rotation speed of the load motor and accelerate or decelerate to the rotation speed specified by the user without speed or position sensors such as photoelectric encoder.

If the flying start is not successful, a dialogue box will pop up as shown in Fig. 4-4.

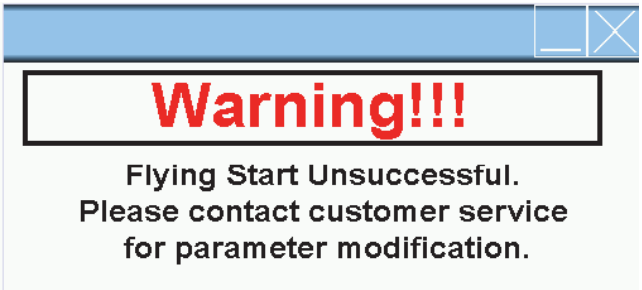

Fig. 4-4 Flying start unsuccessful

Function No.	Description	Min	Max	Default	Unit
P0481	Power-failure trip time	0	65535	3000	Millisecond
P0482	Power-failure trip allowed 0-Not allowed 1-Allowed	0	1	1	—
P0485	Ride-through function enabled 0-Disable 1-Enable	0	1	1	—

- After starting the ride-through function, during the operation of the MVD, when the power grid is powered on after a short time of being powered off, the MVD can automatically restart and restore to the operation state before power-off.
- The user shall set the trip time after power-off according to the actual situation through function number P0481 (default: 3s), and select the trip to be enabled through function number P0482. If the power-failure time of the power grid exceeds this value, the MVD will automatically disconnect the user breaker at the front end.
- The user can also set the trip disabled. The power-failure holding time is determined by the actual load. If neither the trip and the automatic restart function is enabled, when power-cell DC-link voltage is too low, the MVD will still automatically disconnect the user breaker at the front end.

Caution!

◆ When ride through function is enabled, make sure not to try to examine the MVD, motor or load after power loss until the MCB is well tripped.

Function No.	Description	Min	Max	Default	Unit
P0499	Automatic restart function enabled 0-Disable 1-Enable	0	1	0	——
P0500	Automatic restart power-failure trip time	20	1200	1200	Second
P0501	Preparing-time for automatic restart after grid recovers	15	65535	15	Second

- Automatic restart MVD when the grid recovers from a failure with longer time than ride through function. The grid failure time can be up to 20min.
- To enable automatic restart function, ride through function must be enabled by setting P0482=0, P045=1 and P0499=1.
- In case the grid voltage recovers within the setting time (P0500), MVD automatically runs to the pre-set speed after preparing-time (P0501). During preparing-time, automatic restart can be canceled by user through operating 'system reset'. If the grid voltage does not recover within the setting time (P0500), the MCB is commanded to open

Caution!

- ◆ Automatic restart function may cause danger. Please choose this function according to application requirements.
- ◆ When automatic restart function is enabled, make sure not to try to examine the MVD, motor or load after power loss until the MCB is well tripped.

4-2 Protection related parameters

Function No.	Description	Min	Max	Default	Unit
r0018	Overload protection monitoring value	0	1000	—	%

- This function number is used to display the estimated heat loss information of the motor, and when the parameter value is greater than 100%, the overload protection program will be initialized. The information is read-only without default.

Function No.	Description	Min	Max	Default	Unit
P0045	High voltage power-off time	0	65535	900	Second

- High voltage power-off time is the time from detecting the disconnection of high voltage to the reset of the main control system.

During this period, the electromagnetic locks of the power cell, transformer and bypass cabinet doors are electrified, not allowing the cabinet doors to be opened.

Function No.	Description	Min	Max	Default	Unit
r0308	System failure code 1 bit7---A1 system communication failure bit6---B1 system communication failure bit5---C1 system communication failure bit4---A2 system communication failure bit3---B2 system communication failure bit2---C2 system communication failure bit1---reserve bit0---reserve	0	252	—	—
r0309	System failure code 2 bit7---A3 system communication failure bit6---B3 system communication failure bit5---C3 system communication failure bit4---A4 system communication failure bit3---B4 system communication failure bit2---C4 system communication failure bit1---reserve bit0---reserve	0	252	—	—
r0310	System failure code 3 bit7---A5 system communication failure bit6---B5 system communication failure bit5---C5 system communication failure bit4---A6 system communication failure bit3---B6 system communication failure bit2---C6 system communication failure bit1---reserve bit0---reserve	0	252	—	—
r0311	System failure code 4 bit7---A7 system communication failure bit6---B7 system communication failure bit5---C7 system communication failure bit4---A8 system communication failure bit3---B8 system communication failure bit2---C8 system communication failure bit1---reserve bit0---reserve	0	252	—	—

Function No.	Description	Min	Max	Default	Unit
r0312	System failure code 5 bit7---A9 system communication failure bit6---B9 system communication failure bit5---C9 system communication failure bit4---A10 system communication failure bit3---B10 system communication failure bit2---C10 system communication failure bit1---reserve bit0---reserve	0	252	—	—
r0313	System failure code 6 bit7---output phase loss bit6---earthing failure bit5---overload bit4---output phase loss bit3---input undervoltage Bit2---input overvoltage bit1---output overcurrent bit0---input overcurrent	0	252	—	—

- The function numbers above are used to display the current system failure information. The information is read-only information without default.

Function No.	Description	Min	Max	Default	Unit
r0314	Cell failure code 1	0	65535	—	—
r0315	Cell failure code 2	0	65535	—	—
r0316	Cell failure code 3	0	65535	—	—

- The function numbers above are used to display the latest three pieces of failure information of the power cell for service personnel when performing product maintenance. The information is read-only information without default.

4-3 Motor related parameters

Function No.	Description	Min	Max	Default	Unit
P0074	Initial operation frequency at startup	0	7500	100	0.01Hz
P0075	Rated frequency	0	7500	5000	0.01Hz
P0076	Minimum operation frequency	0	7500	100	0.01Hz
P0077	Maximum operation frequency	0	7500	5000	0.01Hz

- The initial operation frequency at startup: initial MVD startup frequency.
- Rated frequency: rated MVD operation frequency
- Minimum working frequency: the minimum MVD frequency when operating continuously. If the reference frequency is lower than the minimum frequency, the system will automatically limit it as the minimum frequency.
- Maximum operation frequency: the highest operation frequency of the MVD.

4-4 Analog Inputs/Outputs

The MVD1000 medium voltage drive is equipped with 2 analog standard input channels (0~10V, 4~20mA; extendible) and 4 analog output channels (0~10V, 4-20mA; extendible).

Function No.	Description	Min	Max	Default	Unit
P0084	Reference frequency threshold	0	7500	0	0.01Hz

- When the reference frequency is given throught the analog input which is noisy and fluctuates, this threshold can be set to make the reference signal stable

Generally, disturbances exist when setting the analog input. Suppose the bandwidth of the disturbance is ΔV and the corresponding frequency bandwidth is ΔF, then the set reference frequency threshold shall be a little higher than ΔF. To avoid weakening the sensitivity of the analog input, this parameter shall not be set too high.

Function No.	Description	Min	Max	Default	Unit
P0207	Analog output channel 1~4 function selection: 0-reserve 1-input side Phase A voltage 2-input side Phase B voltage 3-input side Phase C voltage 4-output side Phase U voltage 5-output side Phase V voltage 6-output side Phase W voltage 7-input side Phase A current 8-input side Phase C current 9-output side Phase U current 10-output side Phase W current 11-analog input channel 1	0	27	27	—
P0208		0	27	16	—

Function No.	Description	Min	Max	Default	Unit
P0209	12-analog input channel 2 13-effective value of input line voltage 14-effective value of output line voltage 15-effective value of input current 16-effective value of output current 17-input power factor 18-output power factor 19-input active power	0	27	0	—
P0210	20-output active power 21-input reactive power 22-output reactive power 23-input apparent power 24-output apparent power 25-MVD efficiency 26-reference frequency 27-operation frequency	0	27	0	—

- The function numbers above are used to define the function selection of the 4 analog input channels.

Function No.	Description	Min	Max	Default	Unit
P0211	Analog output channel 1 zeroing	0	4095	0	—
P0212	Analog output channel 1 AM	0	4095	4095	—
P0213	Analog output channel 2 zeroing	0	4095	0	—
P0214	Analog output channel 2 AM	0	4095	4095	—
P0215	Analog output channel 3 zeroing	0	4095	0	—
P0216	Analog output channel 3 AM	0	4095	4095	—
P0217	Analog output channel 4 zeroing	0	4095	0	—
P0218	Analog output channel 4 AM	0	4095	4095	—

- The function numbers above are respectively used for the zeroing and amplitude modulation of the 4 analog input output channels.

Function No.	Description	Min	Max	Default	Unit
P0219	Analog input 1 disconnection to protect bottom threshold	0	4095	800	—
P0220	Analog input 1 disconnection to protect top threshold	0	4095	4095	—
P0221	Analog input 2 disconnection to protect bottom threshold	0	4095	800	—
P0222	Analog input 2 disconnection to protect top threshold	0	4095	4095	—

- The function numbers above are respectively used to set the protection threshold of

the analog inputs. When the actual value exceeds the threshold, the system judges the analog input to be disconnected.

Function No.	Description	Min	Max	Default	Unit
r0224	Average value of analog input 1	0	4095	—	—
r0225	Average value of analog input 2	0	4095	—	—

- The function numbers above are used to display the average value information of the analog inputs. The information is read-only information without default.

4-5 Digital Inputs/Outputs

The MVD1000 medium voltage drive is equipped with 10 standard user digital input channels (extendible) and 8 standard digital output channel (extendible).

Function No.	Description	Min	Max	Default	Unit
P0085	Digital input frequency setting 1	0	7500	3000	0.01Hz
P0086	Digital input frequency setting 2	0	7500	4000	0.01Hz
P0087	Digital input frequency setting 3	0	7500	5000	0.01Hz

- Used to set the digital input frequency setting value. The default system digital frequency setting is 30Hz, 40Hz and 50Hz. The user can revise the parameters as needed.

Function No.	Description	Min	Max	Default	Unit
P0101	Digital input channel 1~8 function selection 14 states available: 0-reserve 1-control mode 2-high voltage switch 3-external failure 4-reset 5-start motor 6-stop 7-acceleration 8-deceleration 9-emergency stop 10-operation direction of the motor 11-terminal frequency 1 set enabled 12-terminal frequency 2 set enabled 13-terminal frequency 3 set enabled	0	13	2	—
P0102		0	13	9	—
P0103		0	13	11	—
P0104		0	13	12	—
P0105		0	13	13	—
P0106		0	13	0	—
P0107		0	13	0	—
P0108		0	13	0	—

- The function numbers above are respectively used to set the function selection to the 8 digital input channels using 14 functions available. The user can revise the corresponding parameters above as needed.

Function No.	Description	Min	Max	Default	Unit
P0109	When the speed measurement channel A of the photoelectric encoder is not used for motor speed measurement function, the user can select one digital input function.	0	13	0	—
P0110	When the speed measurement channel B of the photoelectric encoder is not used for motor speed measurement function, the user can select one digital input function.	0	13	0	—

- The function numbers above are respectively used to set the function selection of the speed measurement channel of the photoelectric encoder with 14 functions available. The user can revise the corresponding parameters above as needed.

Function No.	Description	Min	Max	Default	Unit
P0111	Digital output channel function selection 10 states available: 0-reserver 1-system ready 2-operation state 3-fault 4-alarm 5-bypass operation 6-high voltage closing 7-control mode 8-Analog reference loss 9-cell failure 10-cell overheat	0	10	1	—
P0112		0	10	3	—
P0113		0	10	4	—
P0114		0	10	8	—
P0115		0	10	0	—
P0116		0	10	0	—
P0117		0	10	0	—
P0118		0	10	6	—

- The function numbers above are used to define the function selection to the 8 digital output channels.

Function No.	Description	Min	Max	Default	Unit
r0120	Digital input: high voltage on-off state	0	1	—	—
r0121	Digital input: external failure	0	1	—	—
r0122	Digital input: emergency stop	0	1	—	—
r0123	Digital input: start	0	1	—	—
r0124	Digital input: stop	0	1	—	—
r0125	Digital input: acceleration	0	1	—	—
r0126	Digital input: deceleration	0	1	—	—
r0127	Digital input: reset	0	1	—	—

r0128	Digital input: terminal frequency 1 set enabled	0	1	—	—
r0129	Digital input: terminal frequency 2 set enabled	0	1	—	—
r0130	Digital input: terminal frequency 3 set enabled	0	1	—	—

- The function numbers above are used to display the digital input state information. The information is read-only information without default.

Function No.	Description	Min	Max	Default	Unit
r0131	Digital output: system ready	0	1	—	—
r0132	Digital output: system operation	0	1	—	—
r0133	Digital output: fault	0	1	—	—
r0134	Digital output: alarm	0	1	—	—
r0135	Digital output: bypass operation	0	1	—	—
r0136	Digital output: high voltage closing	0	1	—	—
r0137	Digital output: control mode	0	1	—	—
r0138	Digital output: cell overheat	0	1	—	—
r0139	Digital output: cell failure	0	1	—	—

- The function numbers above are used to display the digital output state information. The information is read-only information without default.

Function No.	Description	Min	Max	Default	Unit
P0177	8 digital outputs (DO) relay type (lowest level corresponds to DO1, highest level corresponds to DO8) 0-normally open 1-normally closed	0	b11111111	b00000000	—

- The user can define the contact type of the system as needed.

Function No.	Description	Min	Max	Default	Unit
r0223	Digital output: 0-no disconnection failure 1-disconnection failure	0	1	—	—

- The function numbers are used to display the digital output state information. The information is read-only information without default.

4-6 Other functions

Function No.	Description	Min	Max	Default	Unit
P0001	MVD rated output voltage	0	13200	6000/ 10000	V

- Used to set the MVD rated output voltage. The default values of 6kV and 10kV are 6000 and 10000 respectively.

Function No.	Description	Min	Max	Default	Unit
P0002	This value is set by the factory as: 0-default, no change 1-restore all system parameters to factory settings	0	1	0	—

- The user can set the system parameters of the MVD as needed.

Function No.	Description	Min	Max	Default	Unit
P0005	MVD rated input voltage (effective value of line-to-line voltage)	3300	13200	6000/ 10000	V

- Used to set the MVD rated input voltage. The default values of 6kV and 10kV are 6000 and 10000 respectively.

Function No.	Description	Min	Max	Default	Unit
r0015	Displays the current MVD levels	1	12	—	—

- This function number is used to display the MVD current stage information. The information is read-only without default.

Function No.	Description	Min	Max	Default	Unit
r0019	Effective value of output line-to-line voltage (averaged over three phases)	0	13200	—	V
r0020	Effective value of input line-to-line voltage (averaged over three phases)	0	13200	—	V

- The function numbers above are used to display the system output & input line-to-line voltage information. The information is read-only information without default.

Function No.	Description	Min	Max	Default	Unit
r0021	Output active power	0	10000	—	kW

Function No.	Description	Min	Max	Default	Unit
r0022	Output reactive power	0	10000	—	kVar
r0023	Output apparent power	0	10000	—	kVA
r0024	Input active power	0	10000	—	kW
r0025	Input reactive power	0	10000	—	kVar
r0026	Input apparent power	0	10000	—	kVA

- The function numbers above are used to display the system output & input active, reactive and apparent power information. The information is read-only information without default.

Function No.	Description	Min	Max	Default	Unit
r0027	Bypassed power cells	0	12	—	—

- This function number is used to display the bypassed power cell stage information. The information is read-only without default.

Function No.	Description	Min	Max	Default	Unit
r0050	Effective value of output line current (average value of three phases)	0	6000	—	A
r0051	Effective value of input line current (average value of three phases)	0	6000	—	A

- The function numbers above are used to display the system output & input line current information. The information is read-only information without default.

Function No.	Description	Min	Max	Default	Unit
P0052	MVD rated current	0	500	based on model	A

- Used to set the rated current of the MVD. The default value is based on model.

Function No.	Description	Min	Max	Default	Unit
r0070	Actual operation frequency	0	30000	—	0.01Hz

- The function number is used to display the MVD operation frequency information. The information is read-only information without default.

Function No.	Description	Min	Max	Default	Unit
r0093	Input power factor	0	1000	—	‰
r0094	Output power factor	0	1000	—	‰

- The function numbers above are used to display the MVD efficiency, input & output

power factor information. The information is read-only information without default.

Function No.	Description	Min	Max	Default	Unit
r0406	Instantaneous value of output Phase A current (signed number)	0	6000	—	—
r0407	Instantaneous value of output Phase C current (signed number)	0	6000	—	—

- The function numbers are respectively used to display the instantaneous MVD current values through output Phases A and C. The information is read-only information without default.

Function No.	Description	Min	Max	Default	Unit
r0408	Effective value of output current (averaged over three phases, unsigned)	0	6000	—	—

- This function number is used to display the effective value information of the MVD output current. The information is read-only information without default.

Note: All the function parameters above are subject to be referred, the actual contents should be based on each system sets.

V. Operation

This chapter describes the normal operation steps of the MVD1000 medium voltage drive after installation and commissioning.

Caution!

- ◆ Only the personnel who have been trained professionally can operate the MVD1000 medium voltage drive.

5-1 Power-on

1. Execute the MVD installation and commissioning according to Chapter VIII -Commissioning;
2. Switch on the auxiliary control power supply;
3. Input the correct password;
4. Set and check the system function and startup parameters correctly according to Chapter III-Human-machine interface and Chapter IV-Description of detailed functions;

Caution!

- ◆ To ensure the safety and normal operation of the equipment, the important parameters must be confirmed carefully.

5. Close all cabinet doors;
6. Check the main circuit configuration (if a bypass cabinet is configured)
   - Close the input isolation switch;
   - Close the output isolation switch;

Caution!

- ◆ Live operation of the knife gate isolation switch is prohibited.
- ◆ All the cabinet doors shall be closed reliably; otherwise the MVD will not start.

7. Check whether the MVD1000 is ready:
   - The HMI display is normal, and no failure warning information is displayed.
     If there is warning information, please conduct the failure elimination according to Chapter IX-Troubleshooting.
   - The MVD status interface “System-ready” indicator will flicker.
8. The “MCB close allowed” indicator in the MVD status interface will flicker;
9. Close the high voltage breaker. The “MCB closed” indicator in the MVD status interface will flicker;
10. The MVD1000 is ready, and the “Start-up ready” indicator in the MVD status interface will flicker.

5-2 Startup

According to different operation modes and frequency settings, the steps for starting the MVD are as follows:

HMI + HMI:

1. Input the reference frequency in the HMI;
2. Press 

to start the MVD.

HMI + analog input

1. Input the frequency setting through analog input;
2. Press 

to start the MVD.

DCS + DCS:

1. Input the frequency setting through DCS digital interface.
2. Start the equipment through DCS digital interface.

DCS + analog input

1. Input the frequency setting through analog input;
2. Start the equipment through DCS digital interface.

RS485 + RS485

1. Input the frequency setting through RS485 communication;
2. Start the equipment through RS485 communication.

5-3 Stop

The routine stop modes comprise decelerated stop and free stop.

- Free stop: The MVD stops outputting voltage, and the motor rotates freely and decelerates gradually through the load and friction until it stops.

Caution!

- ◆ It shall be fully considered according to the operation condition whether the motor is allowed to stop freely.
- ◆ During free stop, voltage may still exist in the output cables due to the back EMF generated by the motor.

- Stop (decelerated): the MVD stops according to the preset deceleration time.

For the setting of decelerated stop time, see Chapter IV-Description of functional parameters.

According to different operating modes and frequency settings, the steps for stopping the MVD are as follows:

HMI + HMI and HMI + analog input:

Press 

or. 

. The MVD will stop in accordance with the corresponding stop mode, while the main circuit breaker is still closed.

DCS + DCS and DCS + analog input:

Stop the equipment through DCS digital interface.

RS485 + RS485:

Stop the equipment using RS485 communication.

5-4 Power-off

To disconnect the MVD from the main power supply, the steps are as follows:

1. Stop MVD1000 operation;
2. Command the input high voltage breaker to open;
3. Disconnect the input & output isolation switch (if a bypass cabinet is installed);
4. Power off the control power after the power cell finishes discharging.

Caution!

- The cabinet doors must be kept closed within 15 minutes after the high voltage is cut off.
- The control power should not be cut off when the MVD is powered on or the LED indicator of the power cell module is on.

VI. Transportation, storage and installation

The transportation, storage and installation steps for the MVD1000 medium voltage drive are described in detail in this chapter. To ensure the production performance and safety of related operations, please abide by the operation specification and sequence of each link described in this chapter.

6-1 Packaging

Caution!

- During long-distance transportation, the inverter products shall be packaged in a common wooden box. When packaging, the operator must conduct waterproof, moisture proof, mildew proof, rustproof, insect prevention, shockproof, fungus proof, magnetic proof, radiation proof and other protection measures according to correct packaging sequence to make sure that the inverter is kept from suffering damage which could cause quality or economic loss caused by the influence of external forces and unexpected factors.

The names, patterns and meanings of the transportation & storage identifications on the package box of the MVD are as follows:

No.	Identification Name	Identification Pattern	Meaning	Application
1	Fragile object		A fragile object is contained in the box and shall be handled with care.	
2	This side up		The correct position of the box is upward.	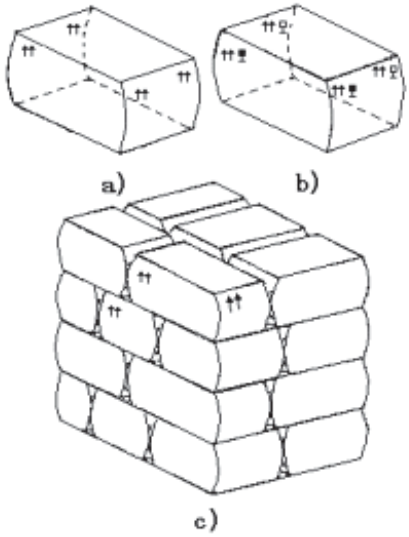

No.	Identification Name	Identification Pattern	Meaning	Application
3	Out of sunlight		The box cannot be directly exposed to sunlight.	
4	Out of rain		The package shall not be exposed to rain.	
5	Gravity center		The gravity center of a cargo unit.	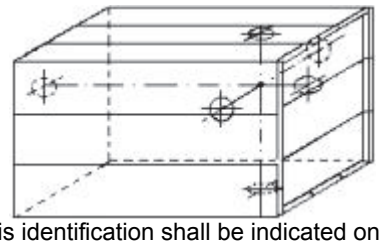 This identification shall be indicated on the actual gravity center position.
6	No rolling		The box can not be rolled.	
7	Limit of stacking layer number		The maximum stacking layer number of the same wooden box packages, and n refers to the layer number limit	
8	No stacking	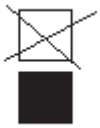	The wooden package cannot be stacked and no other load on its top is allowed.	
9	Lifting from this position		The position for hanging the chains when lifting the cargo.	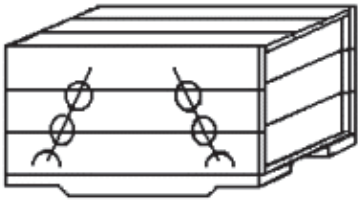 This identification shall be indicated on the actual lifting position.

Preparations for packaging

- The tools required for preparation before packaging include: rubber hammer, iron hammer, plastic-steel strip tightener, special transparent adhesive tape for packaging, pneumatic nail gun, pincer pliers, nipper pliers, lifting equipment and hydraulic fork-lift truck, etc.;
- Packaging accessories required include: anti-falloff screw nail for carpentry, VCI gas-phase rustproof bag, PE film, 500g montmorillonite desiccant, tightening plastic-steel strip, edge wrapped iron sheet, M8-M12 screw and screw cap, EPE shockproof foam and common abrasion proof bubble cushion, etc.;
- Main packaging materials include: wooden pallet, steel-strip enclosure or enclosure with nails and limiting stopper, etc.

Packaging steps:

- With respect to the split components of the MVD (power cell and cooling fans, etc.), PE film packaging shall be implemented firstly with montmorillonite desiccant, and then each item shall be moved to the pallet manually or by means of hydraulic forklift. With respect to the items requiring EPE shock absorption requirements, an EPE cushion shall be laid on the surface of the pallet before the single content is laid one by one, as shown in Fig. 6-1;

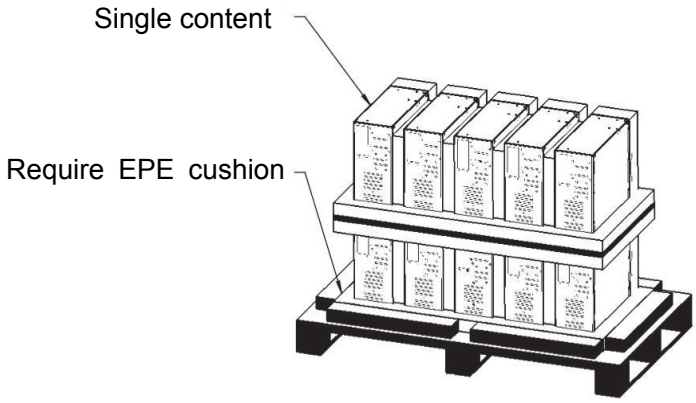

Fig. 6-1 The split components of the MVD are laid on the wooden pallet

- With respect to the MVD cabinet, lay the pallet at a place convenient for the access of the lifting device and then place a VCI gas phase rustproof bag of a proper size on the pallet surface, afterward, lift the cabinet body stably and lay it on the pallet surface by means of the lifting device. It shall be noted that when lifting and laying the cabinet, the edge distance around the pallet shall be proper and even, as shown in Fig. 6-2. For the lifting position and specific requirements, see the handling instructions of the MVD.

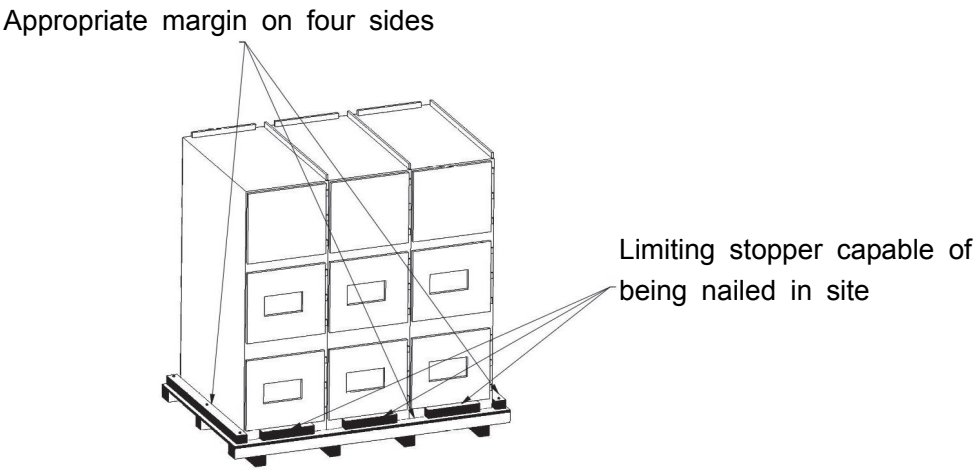

Fig. 6-2 The MVD cabinet body is laid on the wooden pallet

- After the cabinet is laid on the pallet, the whole cabinet shall be packaged with a VCI gas phase rustproof bag with 500g montmorillonite desiccant spread uniformly around the cabinet body. After sealing, the tightening plastic-steel strip can be configured to fix the cabinet body so as to prevent the cabinet body from shaking it up and down. The common abrasion proof bubble cushions shall be filled in the contacts between the plastic-steel strip and the cabinet corners when binding the plastic-steel strip. Afterwards, the EPE foam corner protector shall be adhered to the corners of the cabinet by means of adhesive tape, as shown in Fig. 6-3.

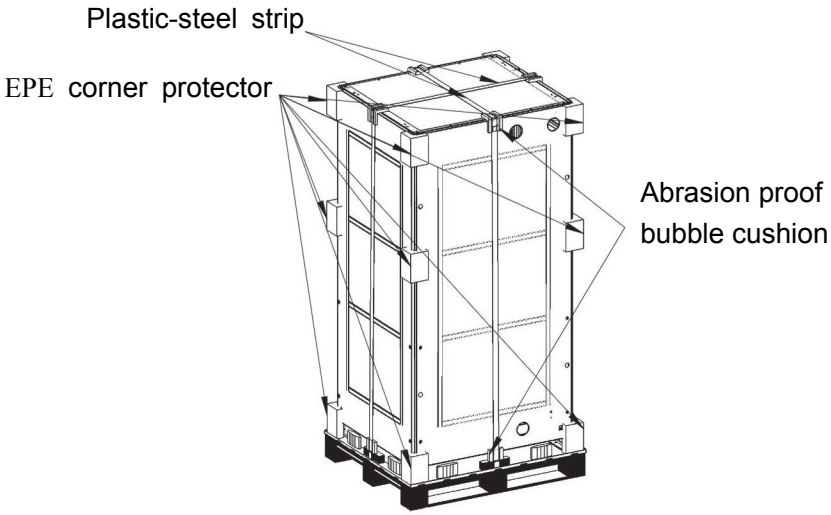

Fig. 6-3 Cabinet fastening

Caution!

◆ All the devices directly contacting the cabinet body shall be configured with common abrasion bubble cushion.

- After settling the MVD and the pallet, conduct the enclosure sealing operation. With respect to the demountable buckle steel-strip wooden box, during enclosure connection, first nail the motherboard onto the pallet surface, wherein the margin around the nail shall be flush or even without any deviation or bulge. After the installation of the motherboard, the front & rear enclosures and the side enclosures shall be assembled with buckles in a flush way. Then install the other side enclosures simultaneously. At last, the upper enclosure can be laid above all the side enclosures, thus the sealing operation is finished, as shown in Fig. 6-4.

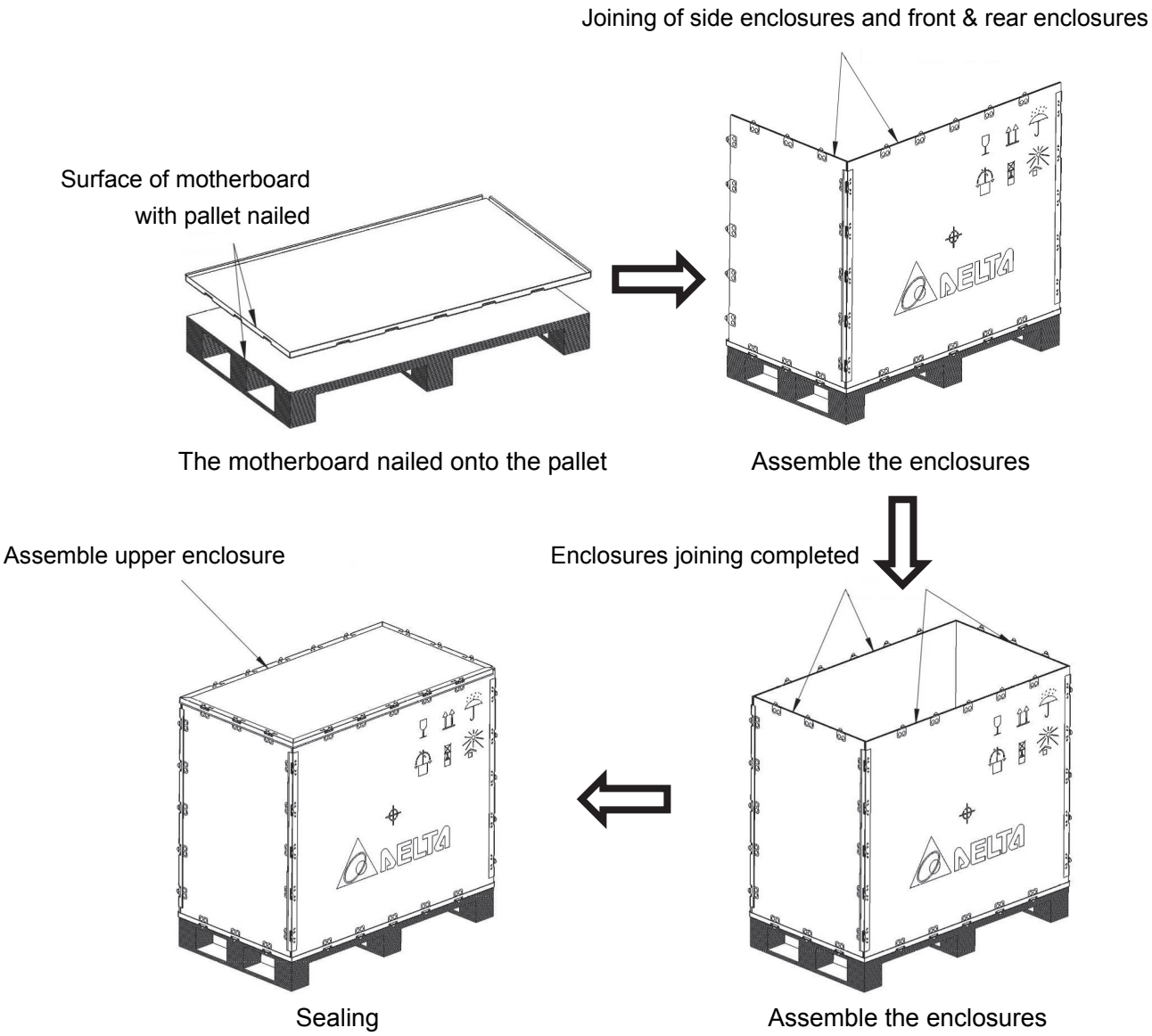

Fig. 6-4 Sealing steps

6-2 Transportation and loading & unloading

The MDV1000 medium voltage drive can be transported by vehicles such as automobiles, trains and ships. The product shall be handled with care during transportation and must be kept away from rain, direct sunlight, shock, impact and upending during transportation, and height limitation and other factors shall also be taken into consideration at the same time.

MVD1000 Combination cabinet: After the split assembly and overall testing, the product will leave the factory in split packages. The product includes three parts: controller cabinet & power cell cabinet, transformer cabinet and bypass cabinet. Usually, the power cell and its cabinet body are packaged separately, while the transformer and the transformer cabinet are packaged as one component.

MVD1000 All-In-One cabinet: The product can be transported by using the whole package.

Caution!

- The material and specification of the lifting rope must meet the weight requirements of the objects to be lifted.
- The lifting speed shall be slow and smooth to ensure the safety of the product and personnel, and rough handling is prohibited.
- The lifting position shall be determined according to the lifting position and gravity center indicated in the identification pattern, and the lifting rope shall be correctly laid on both sides of the wing pallet. With respect to the lifting of the feeding fork wooden box pallet, the proper position of fork hole for laying the lifting rope or feeding the fork shall be determined according to the gravity center identification.
- The loading & unloading operation above shall be accomplished by cooperative personnel under the guidance of special personnel.

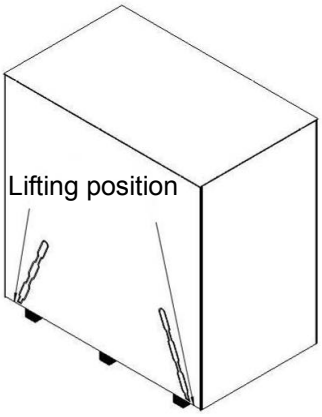

Fig. 6-5 Lifting position of wing pallet

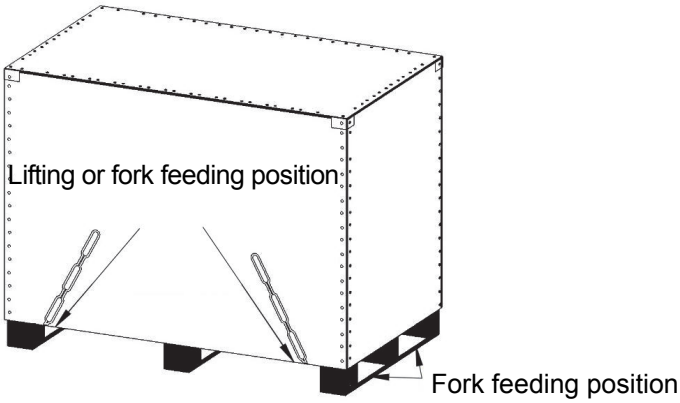

Fig. 6-6 Lifting position of non-wing pallet

According to the type of the pallet, the loading lifting position can be categorized into two types: lifting position of wing pallet (as shown in Fig. 6-5) and lifting position of non-wing pallet (as shown in Fig. 6-6)

6-3 Acceptance check

The complete acceptance check process of the MVD1000 medium voltage drive is as follows:

- Before unpacking, check the number of packing boxes according to the shipping list and then check whether the appearance of the packing boxes is in good condition;
- After unpacking, check the goods and enclosed documents in the packing boxes according to the shipping list to see whether the goods are missing or damaged and whether the documents are missing or inconsistent with the actual documents;
- If there is any damage or inconsistency with the actual situation, please inform our company in time for us to handle it as soon as possible.

6-4 Unpacking & handling

The unpacking process shall be conducted according to the following steps:

- Dismantle the upper enclosure first;
- Dismantle the side enclosures and the front & rear enclosures;
- Dismantle the EPE foam, the PE plastic film wrapped outside and the plastic-steel tightening strip;
- The dismantled wooden packing boxes shall be disposed environmentally in accordance with related requirements.

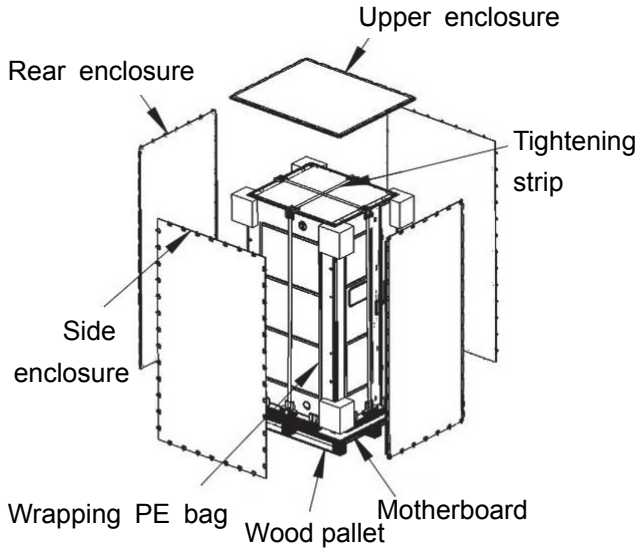

Caution!

- When dismantling the enclosures, with respect to the steel-strip wooden boxes, first bend the steel-strip buckle to the shape shown in Fig. 6-7 by using pliers or other hardware tools. For the wooden boxes nailed with wooden nails, first dismantle the upper enclosure together with the nails, then dismantle the other enclosures, and protective cotton gloves shall be worn during operation to prevent scratches.
- During unpacking, knocking the wooden boxes roughly is prohibited. For the dismantling of all the enclosures of the wooden boxes, the impact on the content shall be avoided.

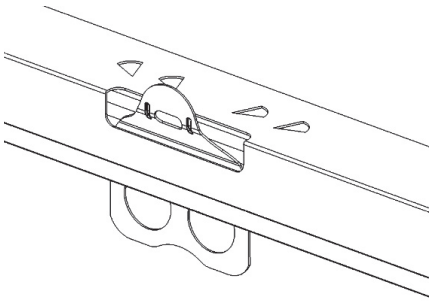

Fig. 6-7 Steel-strip buckle.

MVD1000 Transportation of Combination cabinet:

After all the packages of the MVD cabinet are dismantled (excluding the pallet), a crane or a forklift is required to get them out of the wooden pallet.

Use crane: Lift the 4 lifting rings on the top of each cabinet (excluding transformer cabinet), as shown in Fig. 6-8.

Since the weight of the transformer cabinet is heavy, lifting by using the lifting ring on the top of the cabinet is prohibited. Instead, use the lifting ring of the transformer itself as shown in Fig. 6-9.

Position of lifting rings at four corners

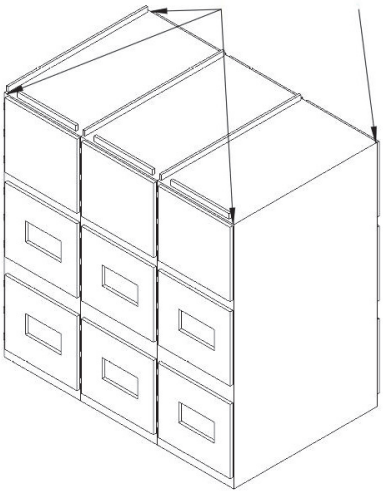

Fig. 6-8

Lifting position of transformer cabinet

Lifting position of the self-provided transformer ring

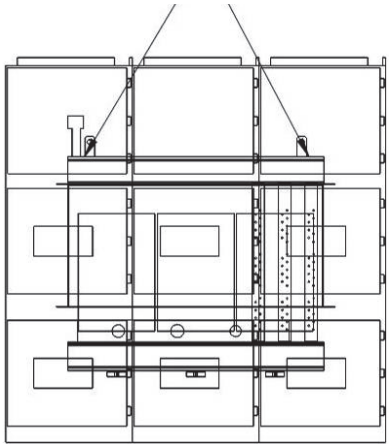

Fig. 6-9

Lifting operation for carrying and moving the cabinet

The cooling fans shall be installed after the lifting and positioning confirmation of the power cell and transformer cabinets are accomplished.

MVD1000 Transportation of All-In-One Cabinet:

Integrated cabinet can be transported through a forklift or a crane.

- Using a forklift

Forklift must be capable of bearing a weight above 4 tons, and there must add a wood block between forklift and cabinet to prevent truck arm from scratching cabinet, shown as figure 6-10.

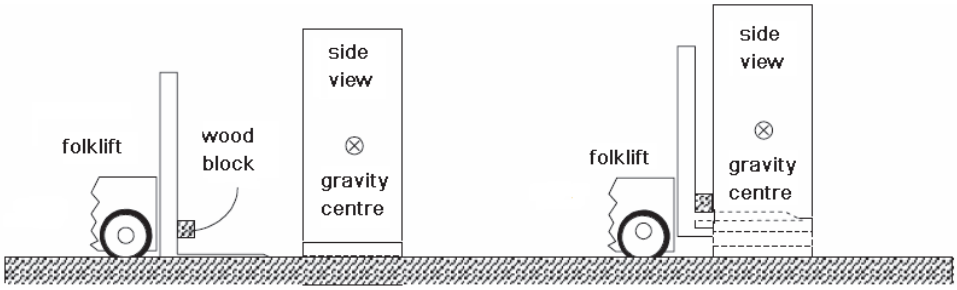

Fig. 6-10 Transportation of Integrated Cabinet through a Forklift

- Using a crane

1. Bearing capacity of crane must fulfill the weight demand.

2. If crane hangs up cabinet from the top, a distance D (>1.5m) between crane hook and cabinet top must be strictly followed, as shown in figure 6-11.

Fig. 6-11 Transportation Method of Crane 1

3. Protection must be done to prevent crane ropes from compressing cabinet and causing damage to it if the reserved holes for forklift in the bottom are to be used. Place a block of wood between those ropes on the top of cabinet, as shown in figure 6-12.

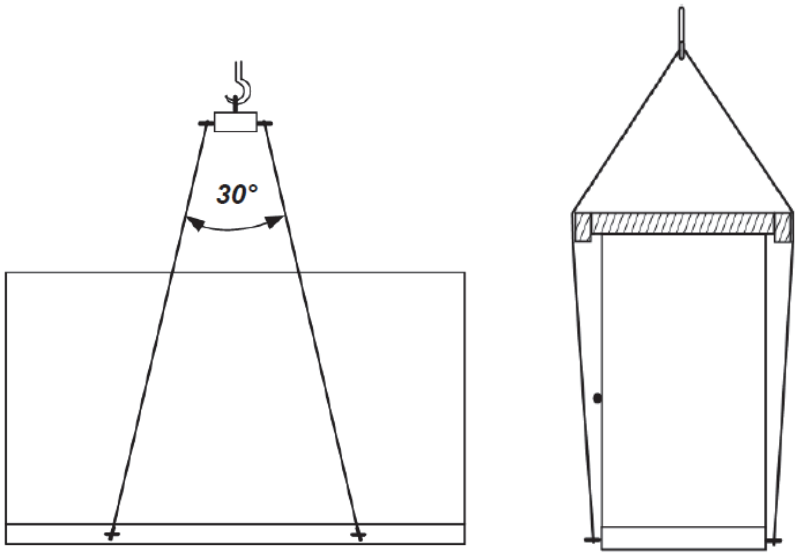

Fig. 6-12 Transportation Method of Crane 2

4. Keep it slow and reduce intense vibration as possible during the transportation process of lifting and landing.

6-5 Storage

The storage temperature range of the MVD1000 medium voltage drive is between -40°C to 70°C, and the relative humidity shall not exceed 95%. The storage environment shall be out of direct sunlight, corrosion, inflammable gas, conductive dust, salt smog and oil smoke, etc.

The MVD inside its packaging can be stored in a dry and ventilated place for more than one year.

If the MVD is unpacked, montmorillonite desiccant (cabinet body: 500g/bag, split component: 125g/bag) shall be put back on when storing it. The wrapped MVD with VCI gas phase rustproof bag can be put on the wooden pallet and stored for more than one year in a dry and ventilated place.

Caution!

- If the MVD is required to be stored for a longer period, please contact us.

6-6 Installation

6-6-1 Installation environment

To ensure the long-term and reliable operation of the MVD, its installation environment shall meet the following requirements:

- The temperature in normal operation environment shall be within -5°C to 40°C. If the ambient temperature exceeds the allowed values, the equipment must be used in derated operation or equipped with corresponding air conditioning equipment;
- The installation altitude shall be lower than 1000m above sea level. When the altitude is higher than 1000m, the equipment shall be used in derated operation;
- The environment relative humidity shall be within 5% to 95% without condensation;
- Pollution degree: II. Chemical gas: IEC 721-3-3, class 3C1.
  Solid particle: IEC 721-3-3, class 3S2

6-6-2 External dimension

The standard appearance and dimension of MVD1000 can be referred to the Annex C. Electrical parameters and dimensions table.

6-6-3 Cabinet ready in position

Caution!

- The installation of the MVD1000 medium voltage drive shall be conducted under the guidance of professional personnel.

For safety and convenience of wiring, it is recommended to install the MVD cabinet on the cable trench as shown in Fig. 6-13. Installation on top of inflammable objects is prohibited.

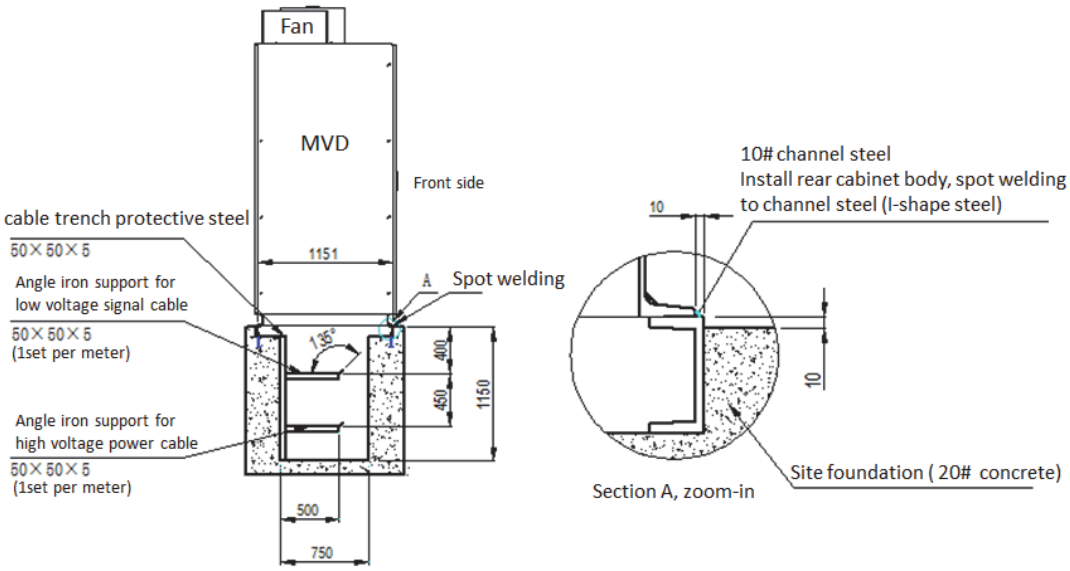

Fig. 6-13 Sectional view of cable trench

Detail requirements are as follows:

- It is recommended to set the minimum length of cable trench as the total MVD length, adding 1m to the left and right for easy cabling and maintenance.
- The MVD base uses 10# channel steel (when the MVD power is higher than 1600kW, 16# channel steel will be used and when it is higher than 4000kW, 18# I-shape steel will be used), specific selection will be conducted according to the MVD weight;
- Reserve free space on top and front of the MVD cabinet, so that the distance between cabinet top and ceiling is ≥800mm, and the distance between cabinet front and walls is ≥1500mm.
- For ventilation and maintenance convenience, the distance from the rear of the dry-type transformer cabinet and the back wall shall be ≥1000mm.

6-6-4 Cabinet attachment

After the MVD cabinets are in position and aligned, the controller, power cell, transformer and bypass cabinets shall be attached to each other. The attachment points between the cabinets are shown in Fig. 6-14:

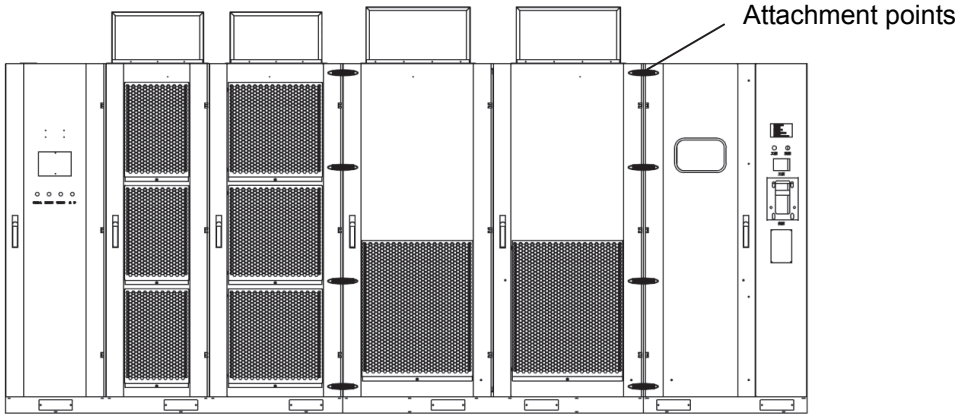

Fig. 6-14 Cabinet attachment

The following points shall be noted:

- When handling and installing the cabinet, shockproof and moisture proof and other safety protection measures shall be taken into account to avoid the frame deformation and paint coating damage;
- The cabinet shall be well aligned before attachment;
- When attaching the cabinets, the basis of the two cabinets can be leaned against each other completely by using a lifting truck or chain-reversing hoist before they are fixed;
- M8×35 screws are used for attaching the cabinets;
- The cabinets shall be earthed reliably;
- The fastening parts used in installation shall be galvanized standard parts.

6-6-5 Cabinet anchoring

The round hole in the middle of the forklift hole on each channel steel base shall be connected and fixed with the trench channel steel using M16×35 screw as shown in Fig. 6-15.

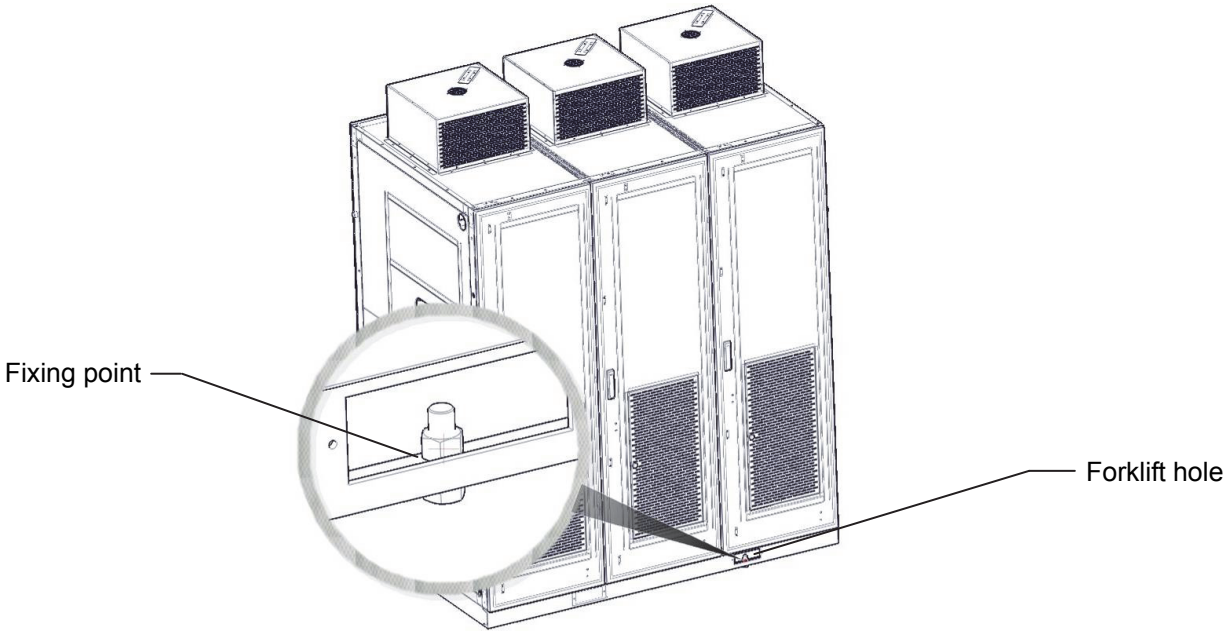

Fig. 6-15 Cabinet fixation

6-6-6 Power cell installation

- The power cell shall be handled carefully and be confirmed that it is not damaged or affected by shock after being unpacked;
- Simple forklift can be used to move and lift the power cell. At least two persons are required for cooperation during installation.
- The power cell shall be completely thrust into the fixing support slot;
- After the power cell is installed, M6×16 screws are required to fix the left and right corners, as shown in Fig. 6-16.

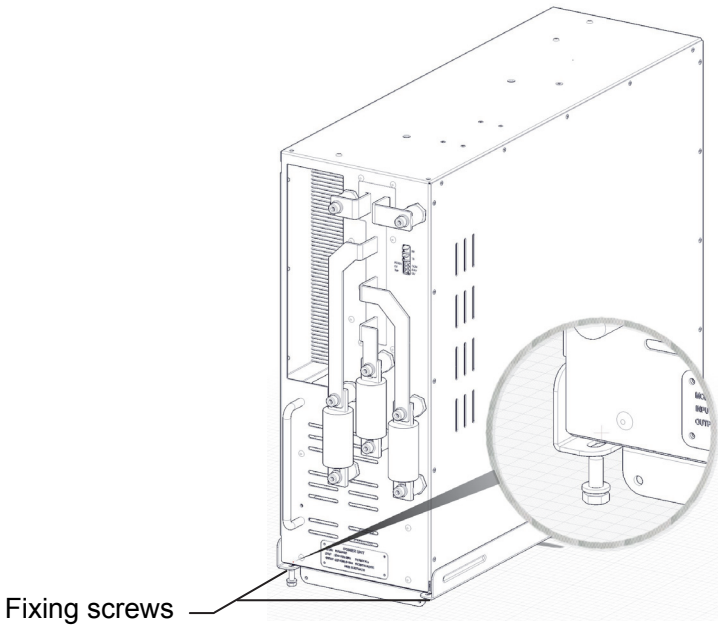

Fig6-15 Power cell installation

VII. System wiring

This chapter will introduce MVD1000 medium voltage drive wiring and spec requirements for terminals. For detailed information of system cables and terminals can be referred to the Annex D MVD1000 cable requirements and terminal details.

7-1 Wiring of the primary loop

The typical wiring of the primary loop is as shown in Fig. 7-1, wherein the circuit breaker QF1 and the connection cables are provided by the user.

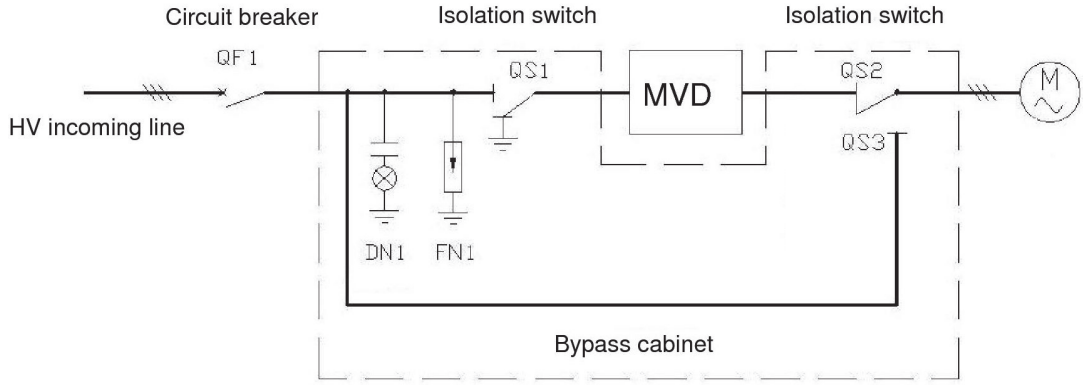

Fig. 7-1 Typical wiring of the primary loop

To make sure that the maintenance of the MVD will not affect the production process, a bypass cabinet is recommended to be included. When the MVD exits from operation, the motor can operate at line frequency by means of the bypass cabinet. QS1, QS2 and QS3 in the bypass cabinet can use manual isolation switches (standard configuration) or vacuum contactors (optional) according to the requirements of the customers. When the vacuum contactor is used, the automatic switching of the motor from variable frequency to power frequency can be realized through the MVD control cabinet.

The primary loop wiring is inside the bypass cabinet of the inverter, and the wiring position is as shown in Fig. 7-2, wherein the incoming lines of the inverter are connected with Terminals A, B and C, and the outgoing lines of the inverter are connected with Terminal U, V and W.

Description of the primary loop terminal:

A, B and C: input terminals of the inverter, connected with three-phase AC mains power.

U, V and W: output terminals of the inverter; connected with three-phase AC motor.

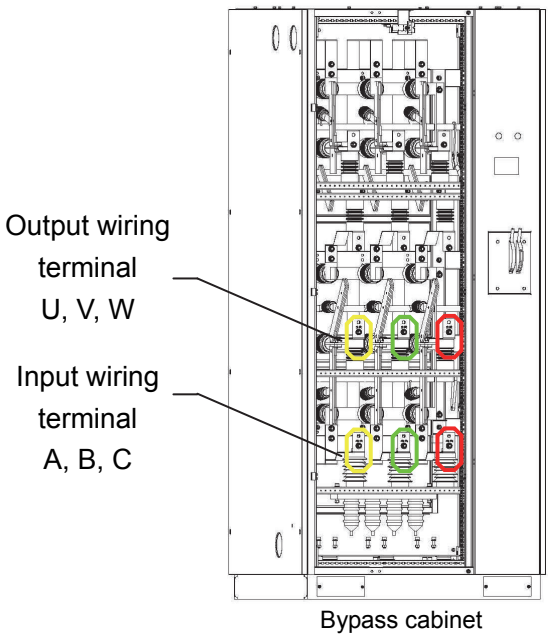

Fig. 7-2 Wiring position of the primary loop

7-2 Control power wiring

The control power uses AC220V±10% with a capacity no less than 5kVA. The user connects L and N of the control with the No. 9 and 10 terminals of the terminal block X11, as shown in Fig. 7-3.

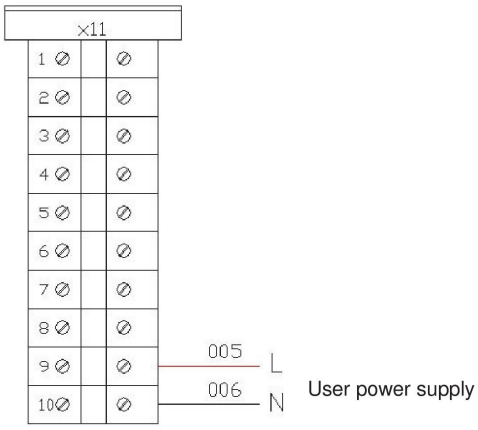

Fig. 7-3 Control power wiring

The power supply of the MVD is a double-loop power. Therefore, in the event of user power failure, the power supply will switch to the auxiliary winding of the phase-shift transformer to output single-phase 220V power, thus the MVD can still operate normally. When the user power restores, the power supply will switch back to the user power.

Protection requirements:

- The user power supply loop, namely, when the neutral point of the control power is directly earthed, the external housing shall be connected with the earthing electrode by using PE lines (the earthing electrode has no electrical connection with the neutral point earthing) and belongs to TT power supply system; but if the neutral point of the control power is not directly earthed, it belongs to IT power supply system;

- The standby control power is generated from the auxiliary winding of the phase-shift transformer, wherein the neutral point is earthed, and the protection zero line (PE) and the working zero line shares the same line. It belongs to TN-C power supply system.

7-3 Control loop wiring

The wiring terminals of the control loop are as shown in Fig. 7-4.

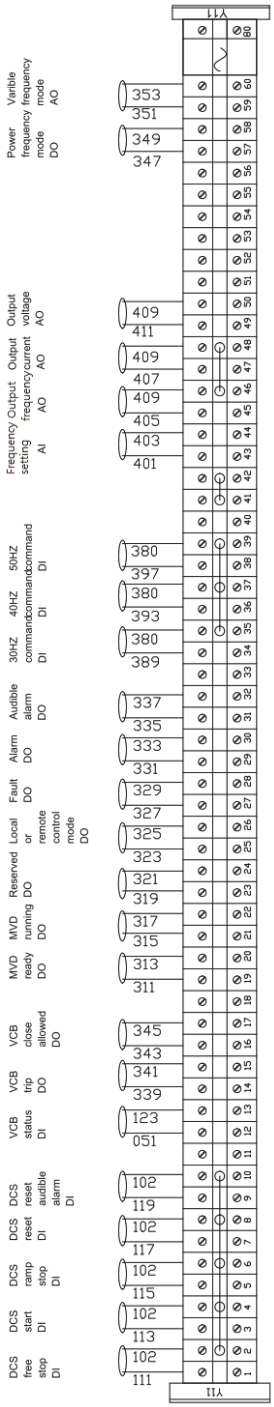

Fig. 7-4 Wiring terminals

7-3-1 Remote control terminal

No. 1~10 and 34~41 terminals of the terminal block Y11 are remote control instruction interfaces. No. 1 and 2 receive the instruction “free stop", No. 3 and 4 receive the instruction “operation”, No. 5 and 6 receive the instruction “frequency-derated stop”, No. 7 and 8 receive the instruction “reset”, No. 9 and 10 receive the instruction “audible and flash light warnings reset”, No. 34 and 35 receive the instruction "operation at 30 Hz", No. 36 and 37 receive the instruction “operation at 40Hz”, No. 38 and 39 receive the instruction “operation at 50Hz”, and No. 40 and 41 receive the instruction “motor protection digital input signal” (external optional signal). The “free stop” uses a self-locking push button, while the startup, deceleration stop, system reset, and reset for audible & flash light warnings use a self-resetting button. When the button contact is closed, the control instruction turns effective.

If the remote control function is not used, the terminal wiring is not required.

7-3-2 Input & output analog terminals

No. 43 and 44 of the terminal block Y11 are the frequency setting analog input signal, wherein No. 43 receives signal input and No. 44 receives signal ground.

No. 45 and 46 of the terminal block Y11 are the output frequency analog output signal, wherein No. 45 sends the signal output and No. 46 the signal ground.

No. 47 and 48 are the motor current analog output signal, wherein No. 47 sends the signal output and No. 48 the signal ground.

No. 49 and 50 are the operation frequency analog output signal, wherein No. 49 sends the signal output and No. 50 the signal ground.

The analog inputs & outputs are configured as 0~10V voltage signal or 4~20mA current signal according to the customer requirements. When the analog output signal is voltage type, the load impedance is required to be higher than 20kΩ; and when the analog output signal is current type, the load impedance is required to be lower than 500Ω.

7-3-3 Site state feedback terminal

No. 19~32 and 57~60 terminals of the terminal block Y11 are the feedback interfaces of the site operation state. No. 19 and 20 receive the instruction “ready for instructions”, No. 21 and 22 receive the instruction “normal operation”, No. 23 and 24 are the pre-reserved engineering interfaces, No. 25 and 26 receive the instruction “remote/local”, No. 27 and 28 receives the instruction “fault”, No. 29 and 30 receive the instruction “alarm”, No. 31 and 32 receive the instruction “audible and flash light warnings”, No. 57 and 58 receive the instruction “power frequency operation state”, and No. 59 and 60 receive the instruction “variable frequency operation state”. The contacts are effective in “closed” state, wherein the audible and flash light warnings can be eliminated through the reset instruction, but the failure instruction will not be eliminated.

7-3-4 User circuit breaker control terminal

No. 12 and 13 terminals of the terminal block Y11 are the feedback signals of the

opening state of the user circuit breaker. When the node is closed, it means that the high voltage is ready.

No. 14 and 15 terminals of the terminal block Y11 are the high voltage emergency breaking output nodes. When the output node is closed, the user breaker shall open immediately.

No. 16 and 17 terminals of the terminal block Y11 are the high voltage “closing allowed” output node. Only when the output node is closed, the user circuit breaker can be closed.

The digital input terminals above are required to be passive nodes with a capacity of 1A/24VDC. The digital output terminals provided by the system are passive nodes with a capacity of 5A/220VAC or 5A/220VDC. The definition above of all the I/O terminals is default, and can be defined and configured again according to the user requirements.

7-4 Typical application wiring map

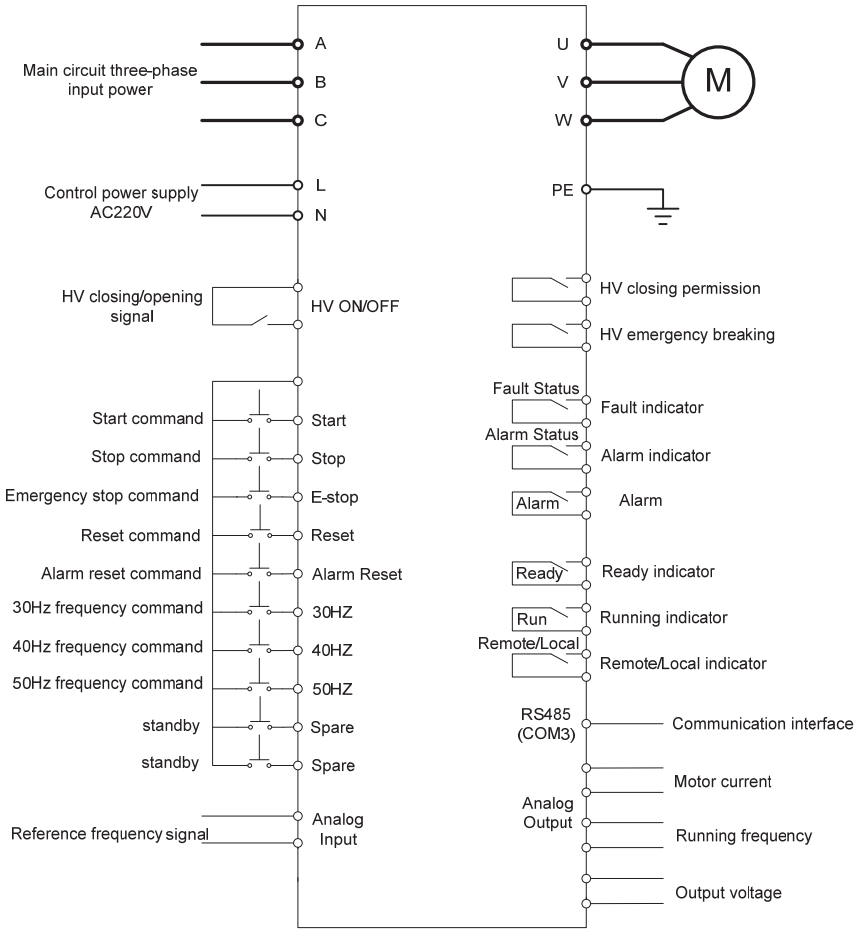

Fig.7-5 Typical application wiring map

7-5 Cautions

For the specific wiring scheme, see the Site wiring diagram. The following items shall be noted during wiring:

- The high voltage cables between the MVD and the user equipment (high voltage power cabinet and motor) are suggested to be armored cables with shielding

function (prevent damage by small animals such as mice; and meet EMC requirements);

- The sectional area of the earthing cables must be ≥16mm² and no more than 1/2 of the sectional area of high voltage phase wires. In addition, good earthing connection with an earthing resistance lower than 4Ω shall be provided by the user;
- The earth leakage current value shall be lower than 3.5mA AC or 10mA DC and shall meet the safety specifications related to high leakage current equipment;
- The PE ⏚ of the system earthing terminal shall be earthed reliably to prevent accidents;
- To avoid interference, the control signals, communication, power source cables, and power motor cables shall be wired separately rather than in the same wiring slot; if separate wiring is impossible, the spacing between the control, signal, communication and power source cables, and power motor cables shall be >30cm. Parallel layout shall be avoided.
- The control signals shall use multi-core wire with a shielding layer, wherein the shielding layer shall be earthed at both ends and shall not be too long;
- The wires used to transmit different signals must be wired in an alternative and mutually-vertical way, for example AC signal and DC signal.
- Do not use the same grounding wire with other power equipment or welding machine.
- Each drive should be grounded independently where there are multi-drives in the same room, series connection to the ground is forbidden.

VIII. Commissioning

The commissioning of the MVD1000 medium voltage drive can only be conducted by qualified and trained engineers authorized by Delta Electronics.

Functional test, commissioning and primary parameter calibration shall be executed by professional engineers in coordination with end users to make sure the final test and performance are according to end users requirements.

8-1 Commissioning preparations

After finishing installation of the MVD1000, the device shall be inspected carefully before commissioning. The specific inspection contents are as follows:

Visual inspection

- The entire MVD set shall be assembled precisely without any cabinet damage, deformation and other defects;
- Open the controller cabinet door and observe whether there are problems such as loosen wires and switch in the wrong position. The terminal boards on the main control box shall be in the right positions. The optical fiber connection shall be in good condition;
- Open the transformer cabinet and observe whether the connection of the wiring terminals is in good condition. Make sure that high & low voltage circuits do not contact each other and whether the temperature sensor installation is in good condition;
- Open the power cell cabinet and check whether the connections in front of the power cell are solid;
- Check whether the installation of the voltage and current sensors are proper and whether the jacks of the signal wires are firmly connected;
- Check whether the earthing copper busbars are connected reliably.

Input & output inspection:

- Check whether the incoming power of the MVD meets the MVD specification;
- Check whether the output voltage of the MVD matches the rated voltage of the motor driven;
- Check whether the control power provided by the user matches the MVD specification;
- Check whether the rated power of the MVD matches the motor specification.

Wiring inspection:

- Check whether the secondary transformer wiring is correct according to the secondary wiring map;
- Check whether the primary wiring is correct according to the primary wiring map;

Earthing inspection:

- Earthing copper busbars resistance requirements
  - Control system earthing: ≤0.5Ω
  - System safety earthing: ≤0.5Ω
  - Machine cabinet support: ≤0.5Ω
  - Transformer support: ≤0.5Ω
  - External housing of the cooling fans: ≤0.5Ω
  - Door locks: ≤0.5Ω.

Insulation inspection:

- Check whether all cables meet the requirements in the wiring technical documents;
- Insulation test for control power: disconnect the control power input and measure the insulation resistance of AC220V terminal at the outgoing parts of the bypass switches QF11, QF12 and QF13 by means of 2500V megger, wherein the insulation resistance is required to be higher than 1 MΩ.

Other preparations:

- Provide an AC auxiliary power supply;
- Collect all necessary device instruction documents, drawings and materials.

8-2 Commissioning process

For the specific commissioning steps, see MVD1000 site commissioning outline.

8-2-1 Personnel coordination during commissioning

During commissioning, the user shall dispatch at least two professional electrical technicians as the necessary operators for commissioning, wherein the operators shall meet the following conditions:

- Be familiar with the low, medium and high voltage electrical equipment and the related safety regulations;
- Be familiar with the user distribution system;
- Be authorized to operate low and medium voltage equipment (high voltage power breaker and other medium & low voltage transmission switches);
- Be authorized to operate the distribution equipment in the customer's premises.

8-2-2 Commissioning acceptance

After finishing commissioning, the commissioning report shall be accepted and signed by the user and the commissioning engineer of Delta Electronics. Two commissioning reports shall be written in duplicate by the commissioning engineer of Delta Electronics, one copy is for the user's record and the other for Delta Electronics.

IX. Troubleshooting

The MVD1000 medium voltage drive is comprised of monitoring and protection function. The failures are categorized into alarms and faults. When there is an alarm, only warning information will be sent and the system can be powered on, started and operated normally. When there is a fault, the system will stop immediately and send warning information.

Click 

to view the specific information on alarms or faults.

Caution!

- When the MVD has a failure, the reset and re-operation of the system shall not be conducted recklessly, instead of that, the reason of the failure shall be found and the system shall be re-operated after eliminating the failure.
- The repair of the MVD shall be conducted after the power is confirmed to be off and the dc link capacitors of the power cells are completely discharged.

Troubleshooting list

No.	Failure item	System operation	Failure definition	Solutions	Remarks
1	Overvoltage of high voltage input	Alarm, stop	The effective value of input voltage is higher than 110% of the rated value	1. Check the input voltage.	
2	Undervoltage of high voltage input	Alarm	The effective value of Input voltage is lower than 90% of the rated value	1. Check the input voltage.	
3	Phase loss of high voltage input	Alarm, stop	One or more input high voltage cable cannot supply primary power to the input transformer	1. Check the input voltage. 2. Check whether the input wiring is loosen or disconnected.	
4	Output phase loss	Alarm, stop	The software detects that the output phase from the MVD to motor is disconnected	1. Check whether the output wiring is loosen or disconnected.	
5	Input overcurrent	Alarm, stop	The input current is higher than 150% of the rated current	1. Check the input current. 2. Check the set value.	The overcurrent standard value can be set by the user
6	Output overcurrent	Alarm, stop	The output current is higher than 150% of the rated current	1. Check the input current. 2. Check the set value.	The overcurrent standard value can be set by the user

No.	Failure item	System operation	Failure definition	Solutions	Remarks
7	System overload	Alarm, stop	When the output current is higher than 120% of the rated current, allow 1 minute's overload every 10 min, when higher than 150%, completely stop the device	1. Check the power grid voltage. 2. Reset the rated current of the motor. 3. Check the load and adjust the torque increase. 4. Choose proper motor.	
8	Upstream optical link fault	Alarm, stop	The optical fiber communication board has not received the signals from power cell unit.	1. Check whether the optical fibers are damaged. 2. Check whether the joints of the optical fibers are loosen.	
9	Analog input disconnection	Alarm	The analog input is disconnected	1. Check the analog circuit.	The system continuously operates and keeps the last reference frequency
10	Transformer over temperature	Alarm	The failure information will be reported when the temperature of the transformer exceeds 95°C	1. Check whether the ambient temperature is too high. 2. Check whether the cooling fans on the top of the transformer work normally. 3. Check whether the air filter screen is blocked. 4. Check whether the MVD is in overload operation for a long time. 5. Check whether the temperature sensor is in good condition..	
11	Transformer over temperature trip	Alarm, stop	The failure information will be reported when the temperature of the transformer exceeds 110°C	The items to be checked are the same as above.	
12	Inlet air under pressure	Alarm	Comparison with the set value of the internal cabinet air pressure: $P_{under} < P_{set} - 25pa$	1. Check the screen for clogged air filter. 2. Check whether the air pressure sensor is in good condition.	The reason might be the clogging of the air filter
13	Inlet air over pressure	Alarm	Comparison with the set value of the air pressure: $P_{over} > P_{set} + 25pa$	1. Check whether the air pressure sensor is in good condition. 2 Check whether the cooling fan is supplied by the right voltage.	
14	Cooling fan power failure	Alarm	When the power of the cooling fan has a failure, the normally-closed	1. Check the fan breaker. 2. Check whether the power supply circuit is normal.	

No.	Failure item	System operation	Failure definition	Solutions	Remarks
			contact of the fan breaker will be opened		
15	Cooling fan over temperature	Alarm	When the interior of the cooling fan is overheat, the normally-closed contact of the internal heat relay will be opened	1. Check whether the fan rotates in reverse direction. 2. Check whether the fan is blocked.	
16	Aux. power #1 failure	Alarm	The 220V power provided by the user terminal is lost	1. Check the state of the main control power. 2. Check whether the corresponding switches are closed and whether the corresponding relays are in good condition.	
17	Aux. power #2 failure	Alarm	The 220V auxiliary winding provided by the phase-shift transformer is lost	1. Check the state of the standby control power. 2. Check whether the corresponding switches are closed and whether the corresponding relays are in good condition.	
18	Aux. power #1 & #2 failure	Alarm, stop	Both 220V auxiliary power supplies from the user's line and from the phase-shift transformer are lost simultaneously.	1. Check the main control power. 2. Check the state of the standby control power. 3. Check whether the corresponding switches are closed and whether the corresponding relays are in good condition.	Operation is allowed for 30 minutes, and the system will stop if there is no action
19	UPS failure	Alarm	The failure information will be reported when there is a failure inside the UPS	1. Find the reasons for UPS failure and restore the power supply as soon as possible.	Can continuously supply the power for at least 30 minutes
20	PLC communication failure	Alarm	PLC disconnects with the main control system	1. Check the communication circuit.	The system continues to operate at the reference frequency prior to the disconnection.

No.	Failure item	System operation	Failure definition	Solutions	Remarks
21	Cabinet door open	Alarm, stop	MVD cabinet door is open	1 Check the state of the MVD cabinet doors. 2 Check the travel switch of the cabinet door and its contacts.	If the cabinet door is open before the high voltage power-on, the closing allowed signal cannot be sent. If the cabinet door is opened during operation, the system will stop immediately.
22	External motor protection	Alarm	To realize an external motor protection, the user can connect the motor protection relay to one preset protection input of the MVD.	1. Check whether the user terminal has failure signal output. 2. Check whether the wiring of signal loop is correct.	
23	Grounding fault	Alarm, stop	The software detects the earthing failure which is usually caused by the input earthing failure (phase-to-ground fault).	1. Check whether the external cables and the motor are earthed. 2. Check the insulation situation of the motor and its cables.	
24	External emergency stop	Alarm, stop	To realize the external emergency stop, the user can connect the preset protection input of the MVD	1. Check whether the emergency stop key is in normal condition.	
25	Power failure of high voltage input	Alarm, stop	MVD receives the disconnection signal of high voltage circuit breaker	1. Check whether the input high voltage exists. 2. Check whether the internal wiring is in normal condition.	
26	Cell communication failure	Alarm, stop	The power cell cannot receive information	1. Check whether the optical fibers are in normal condition. 2. Check whether the joints of the optical fibers are loosen or falling off.	

No.	Failure item	System operation	Failure definition	Solutions	Remarks
27	Transformer thermocouple breaks	alarm	The three-phase resistance bulbs of transformer A, B and C will connect to the three phases of PT thermometry module in PLC, respectively. When the thermocouple of one (or several) phase/s is/are found broken, or resistance bulb of transformer is broken, PLC will detect the correspondent malfunction and feedback the report.	1. Check if the circuit is fine. 2. Check if the resistance bulb is damaged.	
28	Cell drive failure	Alarm, stop	IGBT has a failure	1. Check whether the cell failure indicator indicates normally.	
29	Cell overtemperature	Alarm, stop	Check the temperature of the cooling heat sink near IGBT. If it is higher than 80°C, the normally-closed contact of the temperature sensor switch will be disconnected.	1. Check whether the ambient temperature exceeds the allowed value. 2. Check whether the cooling fan on the top of the cabinet works normally. 3. Check whether the inlet air filter is clogged. 4. Check whether the MVD is in overload operation for a long time. 5. Check whether the cell temperature relay works normally.	
30	Cell overvoltage	Alarm, stop	The voltage of the DC bus voltage exceeds 1150V.	1. Check whether the input high voltage exceeds the maximum allowed value. 2. If overvoltage occurs during deceleration, please prolong the deceleration time of the MVD properly.	

No.	Failure item	System operation	Failure definition	Solutions	Remarks
31	Cell undervoltage	Alarm	The DC bus voltage is higher than 300V, but lower than 580V	1. Check whether the input high voltage is lower than the minimum allowed value. 2. Check whether the cell three-phase incoming line is loosen. 3. Check whether the fuse is in good condition.	
32	Phase-leak of unit	Alarm, stop	Input voltage leak of one or two phase/s of unit.	1. Check if there is any loose condition of three-phase inlet wires of unit. 2. Check if the fuse is still fine. 3. Check three-phase input voltage.	
33	Unit power source breakdown	Alarm, stop	Power source controlled by unit is found abnormal.	Recheck high-voltage, if the same malfunction is still reported, please replace power unit.	

X. Maintenance

This chapter describes the general maintenance plan for MVD1000 medium voltage drive, and all the preventive maintenance as well as spare parts replacement that can be accomplished by the user and Delta's service personnel. Moreover, the preventive maintenance and safety cautions that must be observed by the user are described in detail.

The maintenance tasks conducted by the user is mainly limited to various visual inspections, air filter cleaning, and keeping the installation room as clean as possible.

Caution!

- Only authorized trained personnel can conduct maintenance on the MVD1000 high voltage inverter.
- Do not conduct any maintenance, spare parts replacements or other related operations which are not mentioned in this manual.
- Do not revise the system program or connect other equipment with the inverter. If needed, the user must contact our technical personnel and changes must be agreed and implemented by our technical personnel after approval.

10-1 Standard maintenance process

To ensure safety, the following steps shall be observed:

1. Safety measures: Make sure you are familiar with and will completely abide by the safety measures and cautions described in this manual.
2. Cut off the system power: all the repair operation shall be conducted under mains and auxiliary power in disconnected state. In addition UPS shall be shutdown for maintenance. The input & output isolation switches of the bypass cabinet shall be disconnected, which will earth the MVD input for safety.

Caution!

- When the bypass cabinet operates with high voltage at power frequency, any maintenance or operation is prohibited to be conducted in the bypass cabinet since its parts are subject to high voltage, but maintenance of other parts in the parts of the MVD can be conducted as usual.
- Do not touch the main circuit and the motor before the system is powered off and earthed. When the main power is cut off and the motor stops, the discharge of the DC capacitance in the power cells may require 15 minutes. After the earthing is done and verified, maintenance can be conducted.
- Even if the main voltage and the external voltages of the MVD1000 is cut off, high voltage may still exist in the interior of the MVD1000 cabinets and the 15 min after power cut off shall be observed before maintenance can be done.
- Output voltage detection wire will connect to AD board in the main control box, and a transient high voltage will be generated in a second of the wire disconnected while the high voltage is raising; therefore, any wire connection/disconnection to AD board terminal is forbidden during the process.
- Operator must cut off the power of bypass cabinet (if selected) during maintenance.

3. Conduct the necessary maintenance: Please refer to the maintenance plan and the specific instructions.
4. After maintenance, please check before power-on.
   - The connections of the main power and the motor are in good condition.
   - The connections of the auxiliary power and the control circuit are in good condition.
   - No tools or foreign objects are left in the cabinets.
   - All the cabinet doors including protective isolation facilities shall be closed and ready in position.
5. Restart the MVD: Operate according to the power-on operation instruction to see whether there is any abnormity.
6. Formulate daily record: All the maintenance information (including the revised parameters) shall be recorded in the daily maintenance record:
   - Date and time.
   - Complete maintenance items according to the maintenance plan.
   - Any special situation or work (planed or unplanned spare parts replacement).

10-2 Maintenance plan

To ensure the long-term steady operation of the equipment, it is necessary for the user to conduct correct operation and maintenance. The daily protective maintenance and inspections shall be conducted in a planned way. In addition to the emergency system maintenance, predictive maintenance shall be conducted, including daily, weekly, monthly, quarterly and annual inspections and maintenance.

1、Daily maintenance

Maintenance item	Duration	Maintenance detail
Environment	-Daily	• MVD indoors temperature should in the range of -5～40℃，25℃ is apporiate • Humidity is lower 95%，no condensation • Air passage type MVD should check the condition of ventilation Recommanded record the environment paramenter daily, check if there is abnormal condition. If abnormal, check the air condition of air duct.
Operating parameter	-Daily	• Check the MVD input voltage is correct or not • Check the MVD operating parameter is normal or not, and warning / fault record • Check the temperature of trans former is in the normal range or not（temperateure shoew on HMI can't over 90℃）.
MVD overall	-Daily	Check whether MVD is normal, such as oeperating indicator does not light, abnormal sound, vibration, fire or smell.
Cooling fan	-Daily	• Check whether there is abnormal vibration and sound. • Check if there is cooling fan over temperature and cooling fan power supply drop alarm.
Filter	-Daily	• Check whether the filter is blocked. • Check whther there is air pressure alarm Recommanded clear the filter at least once 1 week. If the dust is heavy, the clear duration should be shorten. To putt of the filter, please check Maintenance 1. Recommanded clear method: wash with water, avoid rubbing, and then dry the filter.
MVD room	-Daily	Check the MVD room daily. Clear the foreign items on time. Recommand clear the MVD room once a week. MVD room clear method: recommand clear the ash and other items with vacuum or wet mop to avoid the dust goes into filter of MVD.

2、Yearly maintenance

Maintenance item	Duration	Maintenance detail
Wiring check (including ground)	-Yearly	Check if the wiring is loosen. The torque wrench can be used.Check the insulation layer of cable is damaged or not and check the grounding. Check Maintenace 2 for detail.
Transformer and high voltage insulation	-Yearly	Phase-shifted transformer primary to ground, secondary wiring (not including 380V wiring) to ground should be more than 100MΩ. Check Maintenace 3 for detail.

Transformer and high voltage withstanding	-Every 2 years	Phase-shifted transfer primary to ground, secondary wiring (not including 380V wiring) to ground is tested with IEC61800 standard. There should be no flashover and no breakdown. 2 times checking and the resistance difference is less than 30%, then the test is passed. Check Maintenace 3 for detail.
MVD internal clearing	-Yearly	Clean the MVD inside with vacuum cleaner. Clean the dust on the surface of component, and clear the dust in the heatsink of power cell.
Component operation status checking	-Yearly	• Use multimeter to check the output voltage of power supply in control cabinet is correct or not（DC24V±0.5V）. • Check the output voltage of UPS is correct or not （AC220V±5V）. • Check the relay works normally or not. Whehter there is abnormal sound. • Check the indicator work normally or not. • Check the electric-magnetic interlocks works normally or not. • Heater and humidistat contorller checking: when set the threshold of humidistat to lower than environment humidity, the heater should start working. After testing, tunr the theshold to 80%. • Check high voltage electirc display neon light, and the second locked circuit normal or not. • Chek the setpoint or relay is correct. • Do close test for vacuum contactor or breaker, check the operation and feedback staus is correct or not. • Check whether the fuse and breaker is normal and no any burn marks.

3、Component Maintenance

Maintenance item	Duration	Maintenance detail
UPS battery bank、storage battery	-Every 3 years	Recommand to change every 3 years for reliable operation. If the change and discharge frequently, the duration should be shortened. Check Mantenance 4 for deital.
	-MVD storage time over 3 months	If the MVD does not turn on for a long period. The UPS battery bank or storage battery need to be charged every 3 month, 8 hours each time.
Spare UPS battery bank, storage battery (if selected)	-Every 3 months	If spare UPS battery bank or storage battery is not used for a while, a routine maintenance of charge is necessary, for detailed information please refer to Maintenance 5.
HMI	-Depend on actual condition	Brightness of HMI decays over time. The replacement duration depend on users.
HMI internal battery	-Every 3 years	Recommand to change every 3 years. Check Mantenance 6 for deital.

PLC internal battery	-Every 8 years	Recommand to change every 8 years. Check Mantenance 6 for deital.
High voltage electric display device	-Every 4 years	Recommand to change every 4 years for reliable operation.
Cooling fan	-Every 4 years	Recommand to change every 4 years. Check Mantenance 7 for deital.
Indicator	-Every 5 years	Recommand to change every 5years.
Switching power supply	-Every 10 years	Recommand to change every 10 years.
Power cell	-MVD storage time over 2 years	If the MVD stored more than 2 years. The high voltage can not be apllied MVD directly. The input voltage should be raised gradually to wait until the capacitor be charged a period of time. Check Mantenance 9 for deital.

Maintenance Guidline shows as following:

1. Replace the air filter

✧ Replace the air filter of transformer cabinet and power cell cabinet (air inlet frame – door lock used):

- Use Key ① to open the filter window frame ② (the window keys can be used universally).
- Disassemble the air filter ③ to be replaced and plug in a new filter ④.
- Close the filter window frame and use the key to lock the frame.
- Record the replacement date.

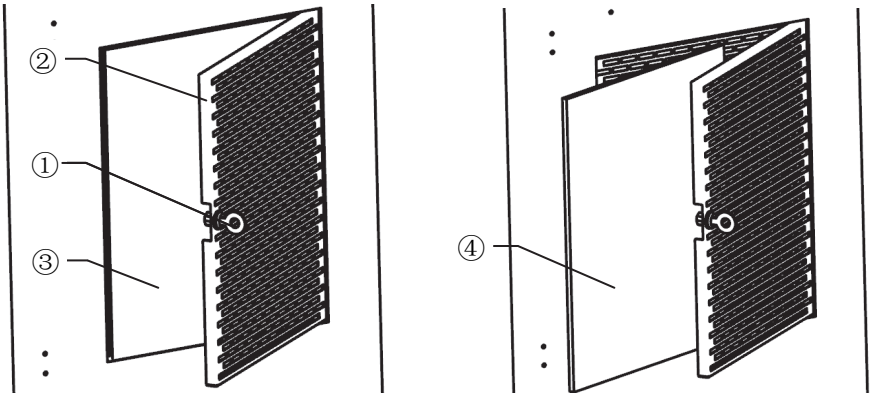

Fig. 10-1 Diagram of Filter Replacement (door lock used)

✧ Replace the air filter of transformer cabinet and power cell cabinet (air inlet frame – float bowl screw used):

- Disassemble the float bowl screw ①, and then take off the frame ②.
- Push the filter compression bar ③ upwards, pull to the outside (shown as 10-2-c) after departing from the fixed bolt in the bottom, and then disassemble the filter compression bar.

- Replace the old filter cotton ④ with a new one.
- Install the filter compression bar, be noticed that all sides of the filter cotton must be compressed tightly in the process.
- Install the air inlet frame, and then record the replacement date.

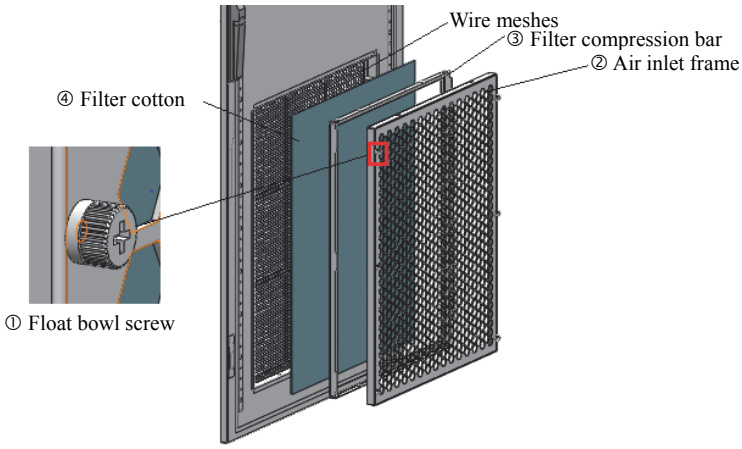

Fig. 10-2-a

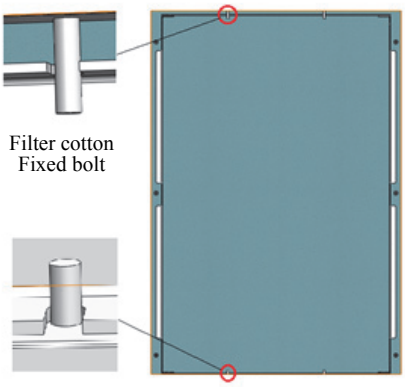

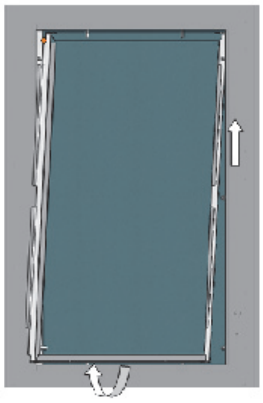

Fig. 10-2-b Fig. 10-2-c

Fig. 10-2 Diagram of Filter Replacement (float bowl screw used)

✧ Replace the air filter of control cabinet (when the door of control cabinet has filter).

- Use slotted screwdriver to plug in the gap under the filter like Fig. 10-3-a. slightly move the screwdriver out to make the cover loosen. The position of plug in show in Fig. 10-3-b.
- Take the filter off according to the direction shown in Fig. 10-3-c.
- Replace the filter like Fig. 10-3-d and restore the cover.

Note: In the air condition room, life time of the filter is 1 year.

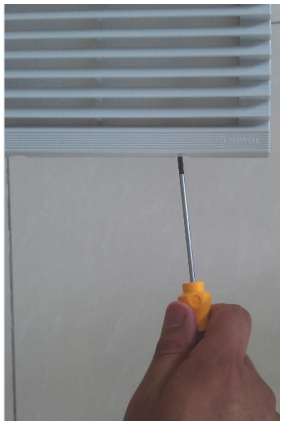

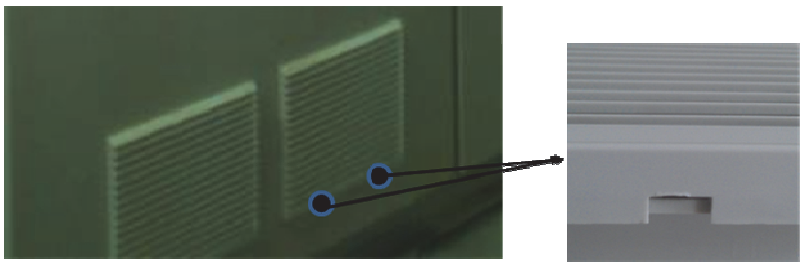

Fig. 10-3-a

Fig. 10-3- b

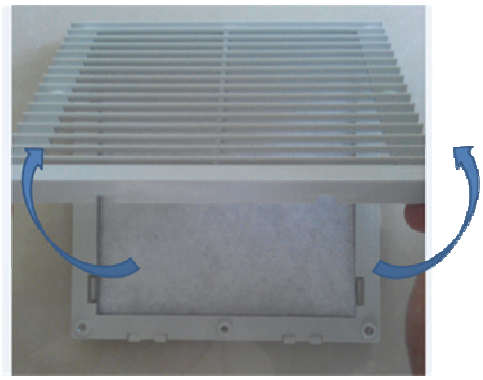

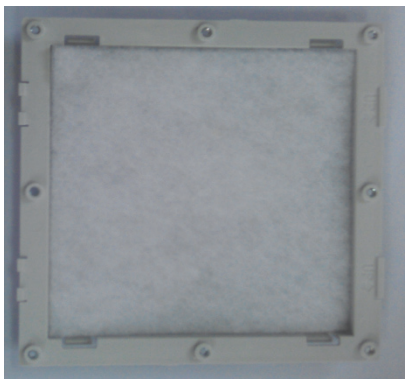

Fig. 10-3-c

Fig. 10-3-d

Fig. 10-3 Diagram of Filter Replacement for control cabinet

2. Check the connection
   - Follow 10-1 maintenance SOP and turn the sustem power off.
   - Take all the safety measures.
   - Check whether the external power cable and controller are connected well.

3. Insulation and withstanding voltage test
   - Disconnect the system input and output cable, make the system niehter in grid state nor variable frequency state.
   - Short the system input 3 phase. Short the system output 3 phase. Input all 1 phase of transformer secondary wiring (could be phase a, b, or c), remove the transformer auxiliary winding, short the input 3 phase of power cell, output of power cell and power cell case, short the input & output of inrush current cabinet (Start-up cabinet).
   - Disconnect netrual to ground, remove the 3 phase input voltage driver resistance, and 3 phase lighting arrester.
   - Check the insulation resistance to ground with 1000V megger, should more than 100 MΩ.
   - Use withstanding voltage to meter to check the withstanding voltage meet IEC61800 (10KV need 24.5kV withstanding voltage, 6kV need 16.7kV withstanding voltage), last 5 second. There should be no flashover and no breakdown. 2 times checking and the resistance difference is less than 30%, then the test is passed.

4. Replace UPS battery bank & storage battery

Replace UPS battery bank:

- Open QF11, QF12 & QF13, and turn off UPS.
- Remove the connection of +、G、- from to UPS which connected to batery bank.
- Unscrew the screw nut, take of the battery bank and replace.

Replace storage battery:

- Open QF15.
- Remove the corner piesce of battery, pull the terminal on the battery polarity out.
- Install the new storage battery and rewire (note the polarity of battery).

5. Spare UPS Battery Bank/Storage Battery Maintenance

- UPS battery bank Maintenance:
  - Make the connection between UPS and battery bank. The red wire means positive connection, the black one means negative connection, and the green one means grounding connection; they are correspondent with the terminal “+”, “-“ and “G” of battery bank, respectively.

Fig. 10-4 Figure Showing

- Connect UPS and supply mains power. Connect the brown wire and the blue wire of UPS input wires through the relay terminal as shown in figure 10-5 to the input plug, and then insert supply mains. Wall socket type for input power is shown as figure 10-6.

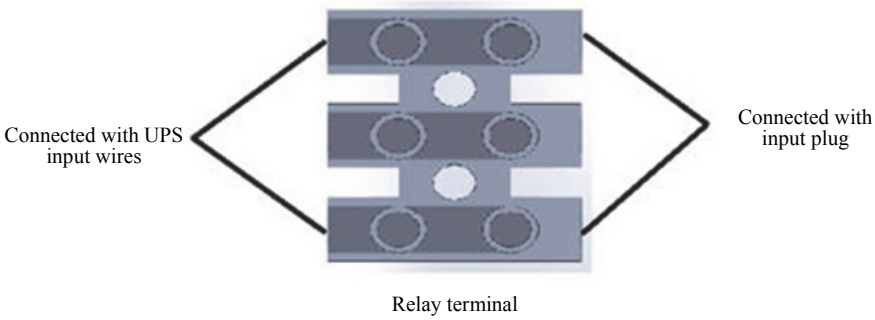

Fig. 10-5 UPS Input Wire and Plug Connection

Fig. 10-6 UPS Input Plug Type

- Charge battery bank. Press the input circuit breaker behind UPS and the fans will be running, UPS will be standby after all the LEDs illuminate for 2~3

seconds, and then power indicator “LINE” and load indicator “LOAD” will light up, charging battery bank automatically.

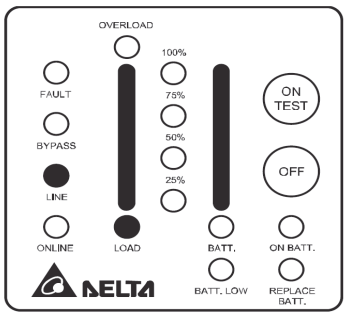

Fig. 10-7 UPS Panel Indicator (standby mode)

- Charge time will need six hours at least. After charging, cut off supply mains power and then disconnect the connected wires between UPS and battery bank, and the process is done.

- Storage battery Maintenance:
  - Prepare for a DC output tunable power, which is provided with an output current limit function.
  - Tune the output voltage of DC power to 14.4V~14.7V, output current limit is set at 1.3A, connect the positive/negative polars to the correspondent sides of the battery, and then open DC power to charge.

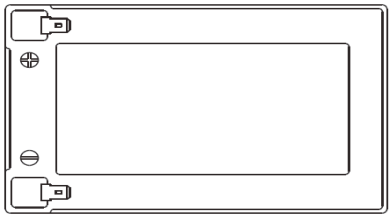

Fig. 10-8 Storage Battery Looks (upper view)

- Every battery needs to be charged for at least 16~24 hours; after charging, cut off DC power and then disconnect the connected wires between storage battery and DC power, and the process is done.
- A scheduled periodical Maintenance is highly recommended if storage battery will not be used in the long term.

Stock temperature	Charge Maintenance period
below 20ºC	Every six months
20 ºC ~30ºC	Every three months
above 30ºC	Stock under this temperature in the long term is strictly forbidden.

6. Replace internal battry of HMI & PLC

Replace HMI internal battery: open the battery cover ① at the back side of HMI, as Fig. 10-9, replace the battery（3V lithiun battery, CR2032×1）.

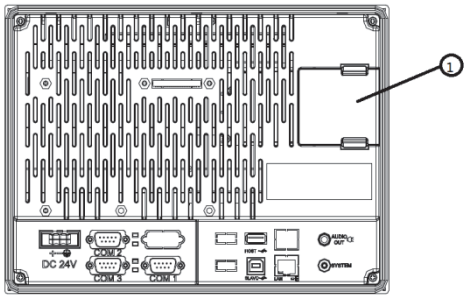

Fig. 10-9 HMI internal battery changing

Replace PLC internal battery: open the battery cover ① at the front side of PLC, take off the baterry plug ③, as Fig. 10-10, replace the new battery.

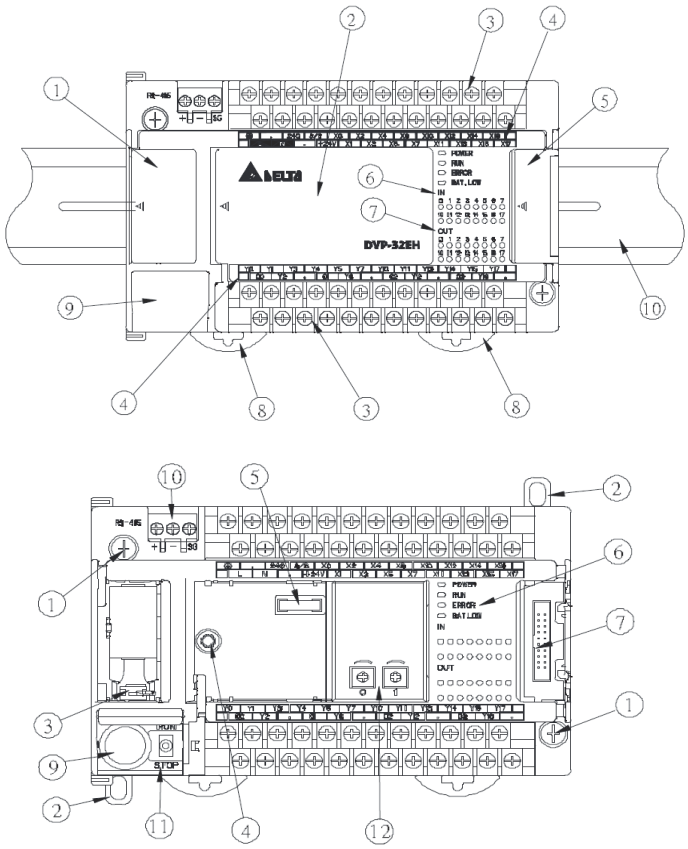

Fig. 10-10 PLC internal battery changing

7. Replace the cooling fan
   - Cut off the system power according to 10-1 Standard maintenance process.
   - Take all the safety measures.
   - If an air duct is used to exhaust hot air outside the installation room, the interface of the air duct shall be disassembled.
   - Loosen up the fixing screw ①（12-M6×16）and disassemble the fan from the cabinet.

- Disassemble the power & cable interface ② of the cooling fan.
- Loosen up the fixing screws ③（12-M4×16）around the fan and disassemble the fan in two parts.
- Loosen up the screws ④（4-M4×16）and ⑤（4- M6×16） on the top cover of the fan and bring out the fan ⑥ to be replaced.
- Install the new fan and fasten the fan screws in reverse sequence.
- If there is an air duct, restore and fix the interface of the air duct.
- Finish up the maintenance and replacement according to the standard process mentioned and detect whether the fan is in normal operation after power-off. Pay special attention to the rotation direction of the fan, wherein the fan shall suck air from the inlet window frame and blow air outwards from the top of the cabinet.

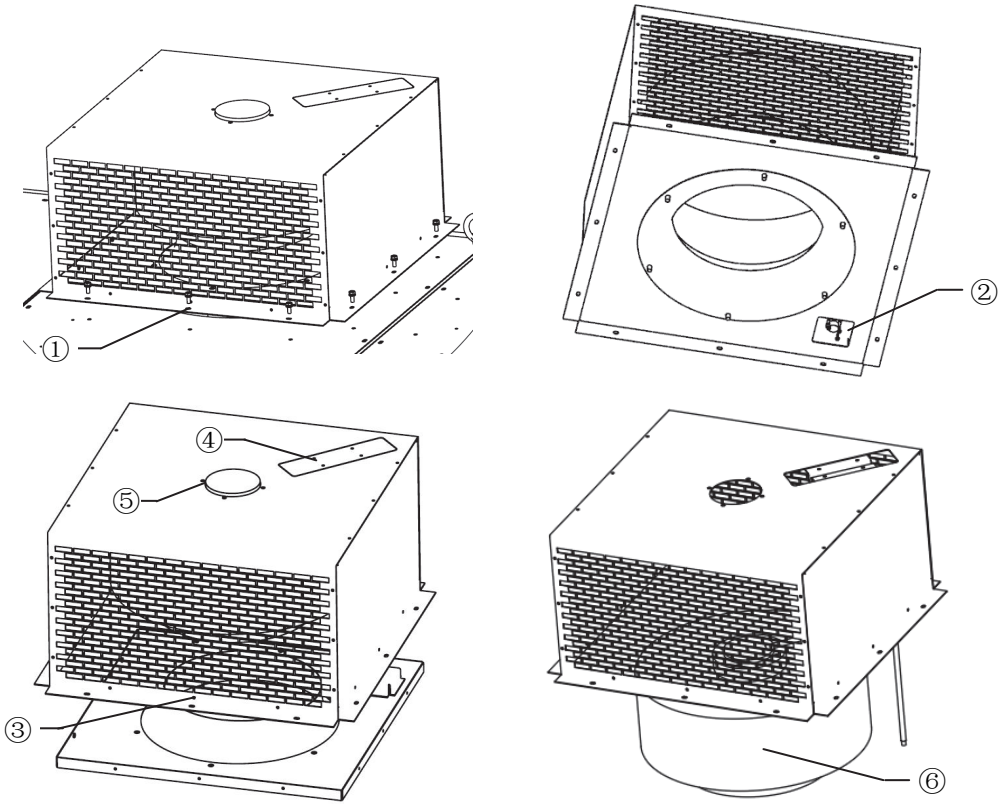

Fig. 10-11 Diagram for replacing the cooling fan

Caution!

- ◆ The cooling fans have different models according to power levels, which shall be noted.
- ◆ The installation of the fan power & cable interface shall be finished before fastening the cooling fan screws.

8. Power Unit Maintenance
   - Take power unit out of MVD or an insulated plastic bag.
   - Place power unit on an insulated location. (withstanding voltage level must exceed input power)

- Electrical connection: three-phase power connected to three-phase current-limiting resistor, and then connect power unit input terminal. Current-limiting resistor and connection of electrical connection are shown in figure 10-12 and 10-13. (different power units may have different mechanical designs, as for electrical connection please choose the hung-up side of fuse)

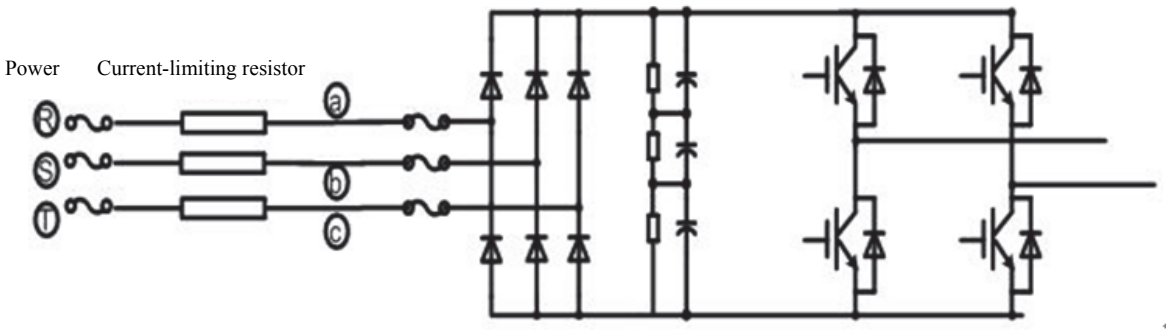

Fig. 10-12 Power Unit Circuit Diagram

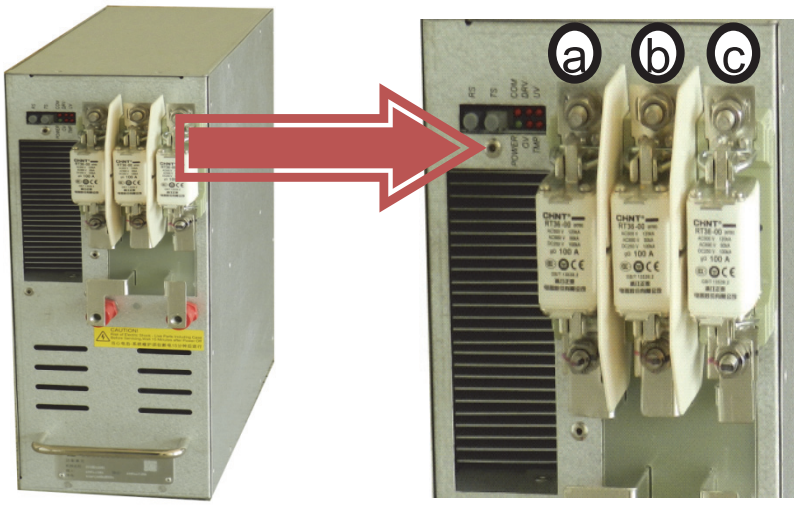

Fig. 10-13 Electrical Connection

- Power unit indicator is shown in figure 10-14; unit status is normal if “POWER” and “COM” light up. If there are other LED indicators lighting up due to a further inspection in necessary, please contact the DELTA personnel.

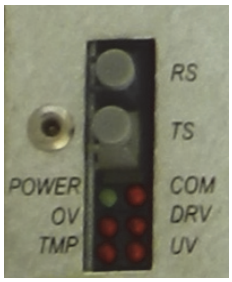

Fig. 10-14 Power Unit Indicator Location

- Power unit running should last one hour. Maintenance is done if there is not any abnormality of indicator after one hour.
- Put power unit back to MVD or an insulated plastic bag.
- Contact DELTA personnel if there is any problem.

9. Replace power cell

- Follow the SOP in ch 10-1 to turn off the system power.
- Make sure the safety work is done.
- Unplug the fiber optical wiring. Use M13 torque sleeve wrench unscrew the combination screws of coppers in the two sides of power cells and fixed screw of power cell 3 phases input (Fig. 10-15). Save the screws carefully.

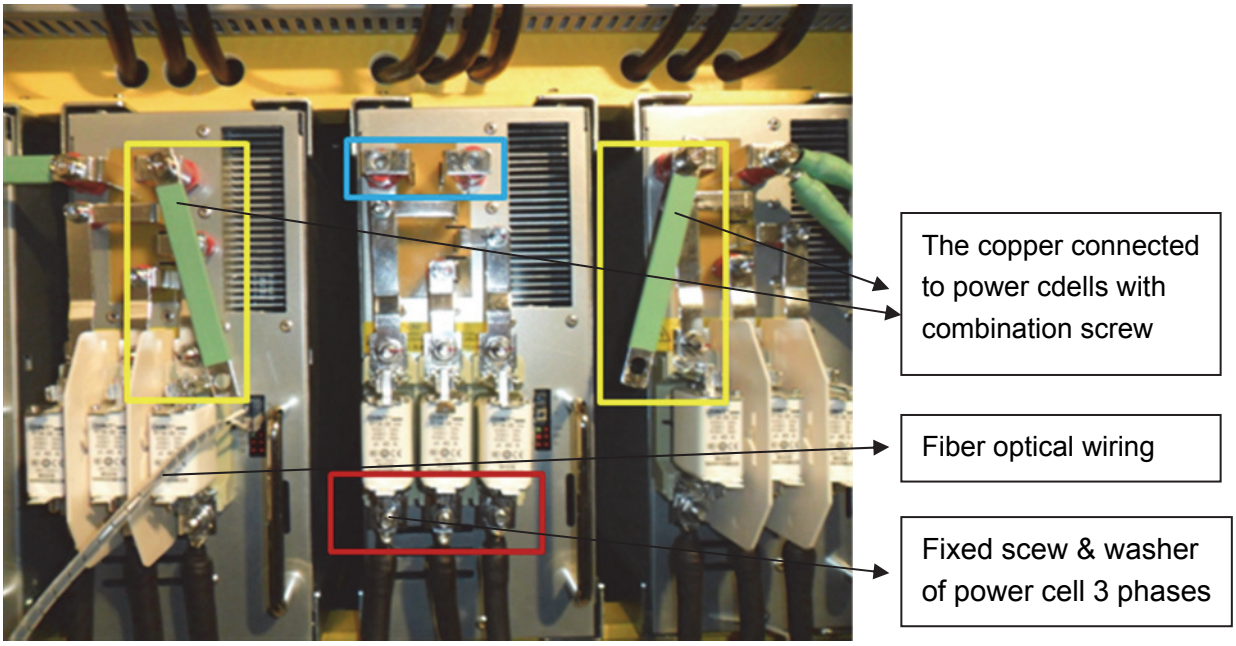

Fig. 10-15 Power cell replacement schematic diagram_1

- Use M8 torque wrench to unscrew the screw under the power cell. Save the screws carefully. Pull the power cell along the track and save the power cell carefully (Fig10-16).

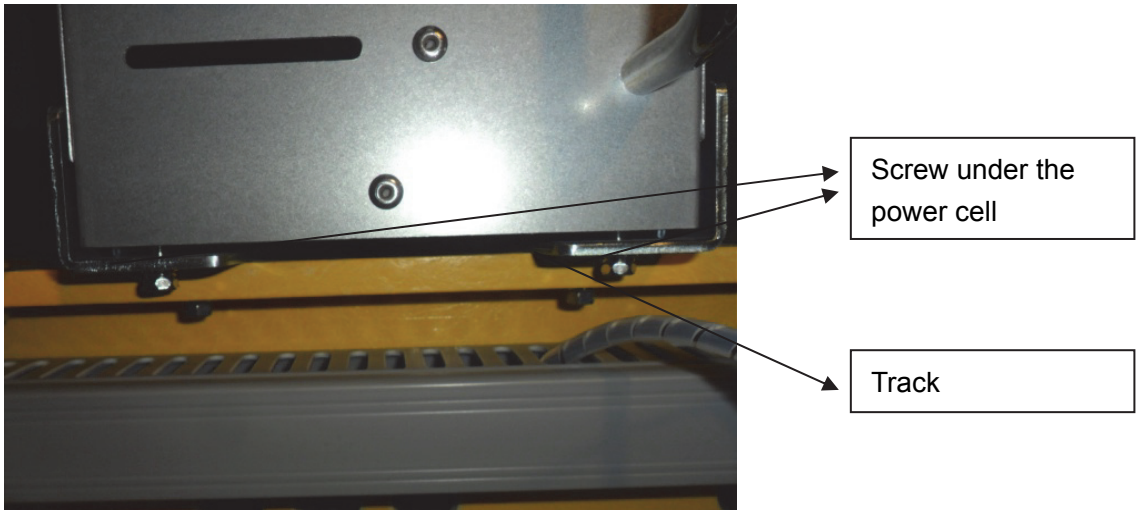

Fig. 10-16 Power cell replacement schematic diagram_2

- Check the nameplate of each power cell. Confirm the nameplate of new power cell is the same as older one.
- Put the new power cells into the track. Use M8 torque wrench to install the screw.

Torque: 29~39kgf.cm.

- Use M13 sleeve wrench to fix the 3 phase input cable to power cell. The order from outside to inside is flat washer, spring washer, screw nut. Torque: 100kgf.cm.
- Use M13 sleeve wrench to connect the combination screw of copper and screw well. Torque: 70~90kgf.cm. Plug in the fiber optical wiring to new power cell. The replacement is complete.

10-3 Daily maintenance record

The daily maintenance record shall contain all the maintenance records. Each record shall include:

- Date and time.
- The maintenance items performed according to the maintenance plan.
- Any special situation or work (planed or unplanned spare parts replacement).

XI. Ordering instructions

- Product model, name and ordering quantity;
- Motor parameters, comprising the type, poles, rated power, rotation speed, input voltage, input current and frequency of the motor;
- Applicable loading type;
- Requirements for communication mode and interfaces;
- Installation environment and its requirements;
- Time & address for delivery;
- Other requirements.

Annex A

MVD1000 Functional Parameters Table

Function No.	Description	Min	Max	Default	Unit	R/W Attribute	Authority Level
P0001	MVD rated output voltage	0	6000 /10000	6000 /10000	V	W	3
P0002	This value is set by the factory as: 0-default, no change 1-restore all system parameters to factory settings	0	1	0	—	W	2
P0004	Torque boost voltage (effective value of line voltage)	0	800	0	V	W	2
P0005	MVD rated input voltage (effective value of line-to-line voltage)	3300	13200	6000/ 10000	V	W	3
P0013	Rotation direction of the motor: 0-forward 1-reverse 2-forward/reverse	0	1	0	—	W	2
r0015	Displays the current MVD levels	1	12	—	—	R	1
r0018	Overload protection monitoring value, when higher than 100%, overload protection procedure will be triggered	0	1000	—	%	R	1
r0019	Effective value of output line-to-line voltage (averaged over three phases)	0	13200	—	V	R	1
r0020	Effective value of input line-to-line voltage (averaged over three phases)	0	13200	—	V	R	1
r0021	Output active power	0	10000	—	Kw	R	1
r0022	Output reactive power	0	10000	—	kVar	R	1
r0023	Output apparent power	0	10000	—	Kva	R	1
r0024	Input active power	0	10000	—	Kw	R	1
r0025	Input reactive power	0	10000	—	kVar	R	1
r0026	Input apparent power	0	10000	—	Kva	R	1
r0027	Bypassed power cells	0	12	—	—	R	1
P0031	AVR function enabled: 0-disabled 1-enabled all the time	0	1	1	—	W	2
P0045	High voltage power-off time	0	65535	900	Second	W	2
r0050	Effective value of output line current (average value of three phases)	0	6000	—	A	R	1
r0051	Effective value of input line current (average value of three phases)	0	6000	—	A	R	1
P0052	MVD current of the MVD	0	500	based on model	A	W	3
P0057	Acceleration time (0~rated frequency)	0	3000	60	Second	W	2

Function No.	Description	Min	Max	Default	Unit	R/W Attribute	Authority Level
P0058	Deceleration time (rated frequency ~ stop)	0	3000	60	Second	W	2
P0061	Minimum setting time for increasing & decreasing frequency (0Hz~rated frequency)	0	3000	60	Second	W	2
r0070	Actual operation frequency	0	30000	—	0.01Hz	R	1
r0071	Reference frequency	0	7500	—	0.01Hz	R	1
P0074	Initial operation frequency at startup	0	7500	100	0.01Hz	W	3
P0075	Rated frequency	0	7500	5000	0.01Hz	W	3
P0076	Minimum operation frequency	0	7500	100	0.01Hz	W	3
P0077	Maximum operation frequency	0	7500	5000	0.01Hz	W	3
P0078	Frequency skipping point 1	100	7500	1500	0.01Hz	W	2
P0079	Frequency skipping point 2	100	7500	2500	0.01Hz	W	2
P0080	Frequency skipping point 3	100	7500	3500	0.01Hz	W	2
P0081	Bandwidth of frequency skipping point 1	0	2000	0	0.01Hz	W	2
P0082	Bandwidth of frequency skipping point 2	0	2000	0	0.01Hz	W	2
P0083	Bandwidth of frequency skipping point 3	0	2000	0	0.01Hz	W	2
P0084	Reference frequency threshold	0	7500	0	0.01Hz	W	3
P0085	Digital input frequency setting 1	0	7500	3000	0.01Hz	W	3
P0086	Digital input frequency setting 2	0	7500	4000	0.01Hz	W	3
P0087	Digital input frequency setting 3	0	7500	5000	0.01Hz	W	3
r0093	Input power factor	0	1000	—	‰	R	1
r0094	Output power factor	0	1000	—	‰	R	1
P0101	Digital input channel 1~8 function selection 14 states available: 0-reserve 1-control mode 2-high voltage switch 3-external failure 4-reset 5-start motor 6-stop 7-acceleration 8-deceleration 9-emergency stop 10-operation direction of the motor 11-terminal frequency 1 set enabled 12-terminal frequency 2 set enabled 13-terminal frequency 3 set enabled	0	13	2	—	W	2
P0102		0	13	9	—	W	2
P0103		0	13	11	—	W	2
P0104		0	13	12	—	W	2
P0105		0	13	13	—	W	2
P0106		0	13	0	—	W	2
P0107		0	13	0	—	W	2
P0108		0	13	0	—	W	2

Function No.	Description	Min	Max	Default	Unit	R/W Attribute	Authority Level
P0109	When the speed measurement channel A of the photoelectric encoder is not used for motor speed measurement function, the user can select one digital input function.	0	13	0	—	W	2
P0110	When the speed measurement channel B of the photoelectric encoder is not used for motor speed measurement function, the user can select one digital input function.	0	13	0	—	W	2
P0111	Digital output channel function selection Input of 10 states available: 1-system ready 2-operation state 3-fault 4-alarm 5-bypass operation 6-high voltage closing 7-control mode 8-Analog reference loss 9-cell fault 10-cell overheat	0	10	1	—	W	2
P0112		0	10	3	—	W	2
P0113		0	10	4	—	W	2
P0114		0	10	8	—	W	2
P0115		0	10	0	—	W	2
P0116		0	10	0	—	W	2
P0117		0	10	0	—	W	2
P0118		0	10	6	—	W	2
P0119	Speed measurement function enabled: 0-digital input channel DIA and DIB are used as common digital input and respectively corresponding to function numbers P109 and P110. 1-digital input channel DIA and DIB are used as speed measurement impulse input.	0	1	0	—	W	2
r0120	Digital input: high voltage on-off state	0	1	—	—	R	1
r0121	Digital input: external failure	0	1	—	—	R	1
r0122	Digital input: emergency stop	0	1	—	—	R	1
r0123	Digital input: start	0	1	—	—	R	1
r0124	Digital input: stop	0	1	—	—	R	1
r0125	Digital input: acceleration	0	1	—	—	R	1
r0126	Digital input: deceleration	0	1	—	—	R	1
r0127	Digital input: reset	0	1	—	—	R	1
r0128	Digital input: terminal frequency 1 set enabled	0	1	—	—	R	1
r0129	Digital input: terminal frequency 2 set enabled	0	1	—	—	R	1
r0130	Digital input: terminal frequency 3 set enabled	0	1	—	—	R	1
r0131	Digital output: system ready	0	1	—	—	R	1
r0132	Digital output: system operation	0	1	—	—	R	1
r0133	Digital output: fault	0	1	—	—	R	1

Function No.	Description	Min	Max	Default	Unit	R/W Attribute	Authority Level
r0134	Digital output: alarm	0	1	—	—	R	1
r0135	Digital output: bypass operation	0	1	—	—	R	1
r0136	Digital output: high voltage closing	0	1	—	—	R	1
r0137	Digital output: control mode	0	1	—	—	R	1
r0138	Digital output: cell overheat	0	1	—	—	R	1
r0139	Digital output: cell failure	0	1	—	—	R	1
r0145	Current frequency setting mode	0	2	—	—	R	1
P0150	Multipoint V/F control: frequency point 1	100	7500	1000	0.01Hz	W	2
P0151	Multipoint V/F control: voltage point 1	0	13200	1600	V	W	2
P0152	Multipoint V/F control: frequency point 2 (higher than Frequency point 1)	150	7500	3000	0.01Hz	W	2
P0153	Multipoint V/F control: voltage point 2 (higher than Voltage point 1)	0	13200	5000	V	W	2
P0160	Startup types: 0-normal startup 1-flying startup	0	1	0	—	W	2
P0177	8 digital outputs (DO) relay type (lowest level corresponds to DO1, highest level corresponds to DO8) 0-normally open 1-normally closed	0	b11111111	b10000000	—	W	3
P0207	Analog output channel 1~4 function selection: 0-reserve 1-input side Phase A voltage 2-input side Phase B voltage 3-input side Phase C voltage 4-output side Phase U voltage 5-output side Phase V voltage 6-output side Phase W voltage 7-input side Phase A current 8-input side Phase C current 9-output side Phase U current 10-output side Phase W current 11-analog input channel 1 12-analog input channel 2 13-effective value of input line voltage 14-effective value of output line voltage 15-effective value of input current 16-effective value of output current 17-input power factor 18-output power factor 19-input active power 20-output active power 21-input reactive power 22-output reactive power 23-input apparent power	0	27	27	—	W	3
P0208		0	27	16	—	W	3
P0209		0	27	0	—	W	3

Function No.	Description	Min	Max	Default	Unit	R/W Attribute	Authority Level
P0210	24-output apparent power 25-MVD efficiency 26-reference frequency 27-operation frequency	0	27	0	—	W	3
P0211	Analog output channel 1 zeroing	0	4095	0	—	W	3
P0212	Analog output channel 1 AM	0	4095	4095	—	W	3
P0213	Analog output channel 2 zeroing	0	4095	0	—	W	3
P0214	Analog output channel 2 AM	0	4095	4095	—	W	3
P0215	Analog output channel 3 zeroing	0	4095	0	—	W	3
P0216	Analog output channel 3 AM	0	4095	4095	—	W	3
P0217	Analog output channel 4 zeroing	0	4095	0	—	W	3
P0218	Analog output channel 4 AM	0	4095	4095	—	W	3
P0219	Analog input 1 disconnection to protect bottom threshold	0	4095	800	—	W	3
P0220	Analog input 1 disconnection to protect top threshold	0	4095	4095	—	W	3
P0221	Analog input 2 disconnection to protect bottom threshold	0	4095	800	—	W	3
P0222	Analog input 2 disconnection to protect top threshold	0	4095	4095	—	W	3
r0223	Digital output: 0-no disconnection failure 1-disconnection failure	0	1	—	—	R	1
r0224	Average value of analog input 1	0	4095	—	—	R	1
r0225	Average value of analog input 2	0	4095	—	—	R	1
r0308	System failure code 1 bit7---A1 system communication failure bit6---B1 system communication failure bit5---C1 system communication failure bit4---A2 system communication failure bit3---B2 system communication failure bit2---C2 system communication failure bit1---reserve bit0---reserve	0	252	—	—	R	1
r0309	System failure code 2 bit7---A3 system communication failure bit6---B3 system communication failure bit5---C3 system communication failure bit4---A4 system communication failure bit3---B4 system communication failure bit2---C4 system communication failure bit1---reserve bit0---reserve	0	252	—	—	R	1

Function No.	Description	Min	Max	Default	Unit	R/W Attribute	Authority Level
r0310	System failure code 3 bit7---A5 system communication failure bit6---B5 system communication failure bit5---C5 system communication failure bit4---A6 system communication failure bit3---B6 system communication failure bit2---C6 system communication failure bit1---reserve bit0---reserve	0	252	—	—	R	1
r0311	System failure code 4 bit7---A7 system communication failure bit6---B7 system communication failure bit5---C7 system communication failure bit4---A8 system communication failure bit3---B8 system communication failure bit2---C8 system communication failure bit1---reserve bit0---reserve	0	252	—	—	R	1
r0312	System failure code 5 bit7---A9 system communication failure bit6---B9 system communication failure bit5---C9 system communication failure bit4---A10 system communication failure bit3---B10 system communication failure bit2---C10 system communication failure bit1---reserve bit0---reserve	0	252	—	—	R	1
r0313	System failure code 6 bit7---output phase loss bit6---earthing failure bit5---overload bit4---output phase loss bit3---input undervoltage Bit2---input overvoltage bit1---output overcurrent bit0---input overcurrent	0	252	—	—	R	1
r0314	Cell failure code 1	0	65535	—	—	R	1
r0315	Cell failure code 2	0	65535	—	—	R	1
r0316	Cell failure code 3	0	65535	—	—	R	1
r0406	Instantaneous value of output Phase A current (signed number)	0	6000	—	A	R	1
r0407	Instantaneous value of output Phase C current (signed number)	0	6000	—	A	R	1
r0408	Effective value of output current (averaged over three phases, unsigned)	0	6000	—	—	R	1
P0481	Power-failure trip time	0	65535	3000	Millisecond	W	2

Function No.	Description	Min	Max	Default	Unit	R/W Attribute	Authority Level
P0482	Power-failure trip allowed	0	1	1	—	W	2
P0485	Ride-through function enabled	0	1	0	—	W	3
P0499	Automatic restart function enabled	0	1	0	—	W	2
P0500	Automatic restart power-failure trip time	20	1200	1200	Second	W	2
P0501	Preparing-time for automatic restart after grid recovers	15	65535	15	Second	W	2

Note: All the function parameters above are subject to be referred, the actual contents should be based on each system sets.

Annex B

MODBUS Communication Protocol

COM3: COM3 port is RS-485 communication port for main station or slave station.

COM3 communication port can be used for Modbus ASCII or RTU communication.

Communication structure:

Communication port / Communication parameters	RS-485 (COM3)
Baud rate	110~115200 bps
Data bit length	7~8 bits
Odd-even check bit	Odd check/even check/no check
Stop data bit length	1~2 data bits
Communication register	D1109
ASCII mode	Valid for both main station or slave station
RTU mode	Valid for both main station or slave station
Read-write data length (ASCII mode)	100 Registers
Read-write data length (RTU mode)	100 Registers

Default communication format of communication port

- Modbus ASCII mode
- 7 data bits
- 1 stop bit
- Odd check bit
- 9600bps Baud rate

1. Mode communication protocol

Communication data structure

9600 (Baud rate), 7 (data bit), Even (Odd-even check bit) 1 (initial bit), 1 (stop bit)

Field name	Composition	Explanation
Initial characters	STX	Initial character is : ’，the ASCII colon code is 3AH
Slave station address	ADR 1	Communication address is composed of two ASCII codes
	ADR0	
Command code	CMD 1	Command code is composed of two ASCII codes.
	CMD 0	

Field name	Composition	Explanation
Data	DATA (0)	Data content is composed of 2n ASCII codes, wherein n≤**205.**
	DATA (1)	
	…….	
	DATA (n-1)	
LRC check code	LRC CHK 1	LRC check code is composed of 2 ASCII codes.
	LRC CHK 0	
End characters	END1	End character is composed of 2 ASCII codes. END1 = CR (0DH), END0 = LF (0AH)
	END0	

The relation between hexadecimal bits and ASCII codes is as shown in the table below:

Hexadecimal bits	"0"	"1"	"2"	"3"	"4"	"5"	"6"	"7"
ASCII codes	30H	31H	32H	33H	34H	35H	36H	37H
Hexadecimal bits	"8"	"9"	"A"	"B"	"C"	"D"	"E"	"F"
ASCII codes	38H	39H	41H	42H	43H	44H	45H	46H

1.1 ADR (communication address)

The valid communication address range is 0～254. When the communication address is 0, it indicates that, for all PLC broadcasts, the PLC receiving broadcast information will not respond to the broadcast information. When the PLC address is not 0, the PLC will respond to normal message to the main station equipment.
For example, the ASCII code of PLC address for communication address being 16 (decimal) is expressed as below (the hexadecimal for decimal 16 is 10)
(ADR 1, ADR0)='1','0'⇨'1'=31H, '0' = 30H

1.2 Command code and data

The format of data characters depends on command code. For example, when reading the data of two continuous addresses with 0614 (hexadecimal) as starting address for PLC, the communication address of the PLC is 1. 0614 (hexadecimal) is address T20 inside PLC. The data on communication line and meaning of data are explained as below:
PC→PLC communication line data:
3A 30 31 30 33 30 36 31 34 30 30 30 32 45 30 0D 0A
PLC→PC communication line data:
3A 30 31 30 33 30 34 30 30 30 31 30 30 30 32 46 35 0D 0A

Request message:

Field name	Data (hexadecimal)	ASCII codes
Initial characters	“：”	3A (hexadecimal)
Slave station address: 01 (hexadecimal)	“0”	30 (hexadecimal)
	“1”	31 (hexadecimal)
Command code: 03 (hexadecimal)	“0”	30 (hexadecimal)
	“3”	33 (hexadecimal)
Initial data address: 0614 (hexadecimal)	“0”	30 (hexadecimal)
	“6”	36 (hexadecimal)
	“1”	31 (hexadecimal)
	“4”	34 (hexadecimal)
Data number (unit: character): 2 (hexadecimal)	“0”	30 (hexadecimal)
	“0”	30 (hexadecimal)
	“0”	30 (hexadecimal)
	“2”	32 (hexadecimal)
LRC check code: E0 (hexadecimal)	“E”	45 (hexadecimal)
	“0”	30 (hexadecimal)
End character 1: 0D (hexadecimal)	CR	0D (hexadecimal)
End character 0: 0A (hexadecimal)	LF	0A (hexadecimal)

Response message:

Field name	Hexadecimal bits	ASCII codes
Initial characters	“：”	3A (hexadecimal)
Slave station address: 01 (hexadecimal)	“0”	30 (hexadecimal)
	“1”	31 (hexadecimal)
Command code: 03 (hexadecimal)	“0”	30 (hexadecimal)
	“3”	33 (hexadecimal)
Read data number (unit: character)	“0”	30 (hexadecimal)
	“4”	34 (hexadecimal)
Read the content of hexadecimal communication address 0614 (address of T20)	“0”	30 (hexadecimal)
	“0”	30 (hexadecimal)
	“0”	30 (hexadecimal)
	“1”	31 (hexadecimal)
Read the content of hexadecimal	“0”	30 (hexadecimal)

Field name	Hexadecimal bits	ASCII codes
communication address 0615 (address of T21)	“0”	30 (hexadecimal)
	“0”	30 (hexadecimal)
	“2”	32 (hexadecimal)
Error check (LRC) code	“F”	46 (hexadecimal)
	“5”	35 (hexadecimal)
End character 1	CR	0D (hexadecimal)
End character 0	LF	0A (hexadecimal)

1.3 LRC check (check sum)

LRC check code is the value through reversing the digits of the value obtained by superimposing the hexadecimal number from the slave station address to the last data content and then adding 1 to the reversed value. For instance, the LRC check code is F6 (hexadecimal), as shown below. The calculation method of the LRC check code is as follows: 01H+03H+04H+01H+00+01H = 0AH, 0A (hexadecimal), the resulting value by reversing the digits plus 1 is F6 (hexadecimal).

STX	‘: ’
Slave station address	**‘0’**
	‘1’
Command code	**‘0’**
	‘3’
Initial data address	**‘0’**
	‘4’
	‘0’
	‘1’
Data number (unit: character)	**‘0’**
	‘0’
	‘0’
	‘1’
LRC CHK 1	‘F’
LRC CHK 0	‘6’
End character 1	CR
End character 0	LF

Abnormity response:

After receiving a command message from the main station, the slave station is expected to give a normal response message. However, the PLC may fail to respond or sometimes respond with an error after receiving the command message from the main station.

Hereinafter is the description that the PLC fails to respond to the main station equipment or it responds the error reason.
1. PLC fails to receive correct command message due to communication error. Therefore, when the PLC fails to respond to the message, the main station equipment must set a communication timeout condition.
2. Without communication error, the PLC receives a valid communication message, but fails to understand the message, so the PLC may give an abnormity response to the main station. The highest level bit of the command code responding to the response is set to be 1 and an abnormity code may be returned to explain the abnormity response reason.

For example when the command code is 01H, the abnormity response code is 02H.

Request message:

Field name	Characters
Initial characters	“：”
Slave station address	“0”
	“1”
Command code	“0”
	“1”
Initial data address: 0400	“0”
	“4”
	“0”
	“0”
High byte of node number Low byte of node number	“0”
	“0”
	“1”
	“0”
LRC check code	“E”
	“A”
End character 1	CR
End character 0	LF

Response message:

Field name	Characters
Initial characters: ”：”	“：”
Slave station address: 01 (hexadecimal)	“0”
	“1”
Command code: 81 (hexadecimal)	“8”
	“1”
Abnormity code: 02 (hexadecimal)	“0”
	“2”
Error check (LRC) code: 7C (hexadecimal)	“7”
	“C”
End character 1: 0D (hexadecimal)	CR
End character 0: 0A (hexadecimal)	LF

Abnormity code	**Meaning**
01	Illegal command code: the command code in the command message received by PLC is invalid
02	Illegal device address: the address in command message received is invalid
03	Illegal device value: the data content in the command information received by PLC is invalid
07	1. Check sum error 1.1 check whether check sum is correct 2. Illegal command message 2.1 too short command message 2.2 command message length exceeding limit

The format of the data characters depends on the command code. The description of valid command code is as shown in the table below:

Command code	**Meaning**	**Operable device**
01	Read node state (cannot read input node state)	S, Y, M, T, C
02	Read node state (can read input node state)	S, X, Y, M,T, C
03	Read the content value in register	T, C, D
05	Force single node state	S, Y, M, T, C
06	Preset the value of single register	T, C, D

Command code	Meaning	Operable device
15	Force multiple node states	S, Y, M, T, C
16	Preset the value of multiple registers	T, C, D
17	Report slave station address	None

2. RTU Mode communication protocol

Communication data structure
9600 (Baud rate), 7 (data bit), Even (Odd-even check bit) 1 (initial bit), 1 (stop bit)

Start	Keep no input data ≥10 ms
Slave station address	Slave station address: 8-bit binary number address
Command code	Command code: 8-bit binary number address
Data (n-1)	Data content n × 8-bit binary number, n<=202
…….	
Data 0	
CRC check sum low byte	CRC check sum CRC check sum consists of two 8-bit binary numbers
CRC check sum high byte	
End	Keep no input data ≥10 ms

2.1 ADR (communication address)

Valid communication address range is 0～254. When the communication address is 0, it indicates that, for all PLC broadcasts, the PLC receiving broadcast information will not respond to the broadcast information. When the PLC address is not 0, the PLC will respond to normal message to the main station equipment.
For instance, when communicating with PLC whose communication address is 16 (hexadecimal), the slave address must be set to 10 (hexadecimal) and the hexadecimal number of the decimal number 16 is 10.

2.2 Function code and data

The format of data characters depends on command code. For instance, read the content of 8 continuous addresses of PLC (communication address is 1) whose starting address is 0614 (hexadecimal), as shown below.

Field name	Data (hexadecimal)
Start	Keep no input data ≥10 ms
Slave station address	01
Command code	03
Initial data address	06
	14
Data number (unit: byte)	00
	08
CRC check sum low byte	04
CRC check sum high byte	80
End	Keep no input data ≥10 ms

Example: read the value of slave equipment (communication address is 1) T20~T27.

PC→PLC

" 01 03 06 14 00 08 04 80"

PLC→PC

" 01 03 10 00 01 00 02 00 03 00 04 00 05 00 06 00 07 00 08 72 98"

Field name	Data (hexadecimal)
Start	Keep no input data ≥10 ms
Slave station address	01
Command code	03
Data number (unit: byte)	10
Data high byte (T20)	00
Data low byte (T20)	01
Data high byte (T21)	00
Data low byte (T21)	02
Data high byte (T22)	00
Data low byte (T22)	03
Data high byte (T23)	00
Data low byte (T23)	04
Data high byte (T24)	00
Data low byte (T24)	05
Data high byte (T25)	00
Data low byte (T25)	06
Data high byte (T26)	00
Data low byte (T26)	07

Field name	Data (hexadecimal)
Data high byte (T27)	00
Data low byte (T27)	08
CRC check sum low byte	72
CRC check sum high byte	98
End	Keep no input data ≥10 ms

2.3 CRC check (check sum)

CRC check starts from “slave station address” and ends at “the last data content”. CRC check calculation method as below:
Step 1: load a 16-bit register with content value being FFFF (hexadecimal) (known as CRC register).
Step 2: conduct “XOR” operation between the 8-bit data of the first byte in the command message and the 8-bit data of the low byte CRC register, save the operation result in the CRC register.
Step 3: move the content value of CRC register rightwards by 1 bit and fill 0 in the highest level.
Step 4: Check the lowest level value of the CRC register. If it is 0, repeat Step 3; if it is 1, conduct “XOR” operation between the CRC register content and A001 (hexadecimal), and save the operation result in the CRC register.
Step 5: repeat Step 3 and 4 until the CRC register content is moved rightwards by 8 bits. At this time, the first byte of the command message is successfully processed.
Step 6: repeat Step 2 to 5 for the next byte of the command message until all the bytes of the command message are successfully processed. The last content of the CRC register is CRC check value. When transmitting CRC check value in the command message, the high and low level bytes of CRC check value calculated must be interchanged, namely, the low level byte of CRC check value is transmitted firstly.
The following is the example by using Language C to calculate CRC check value.

```
unsigned char* data      ← // pointer of command message content
unsigned char length     ← // length of command message
unsigned int crc_chk(unsigned char* data, unsigned char length)
{
   int j;
   unsigned int reg_crc=0Xffff;
   while(length--)
   {
      reg_crc ^= *data++;
      for (j=0;j<8;j++)
      {
         If (reg_crc & 0x01) reg_crc=(reg_crc>>1) ^ 0Xa001; /* LSB(b0)=1 */
         else reg_crc=reg_crc >>1;
      }
   }
```

```
    return reg_crc; // the value that sent back to the CRC register finally
}
```

Abnormity response:

After receiving a command message from the main station, the slave station is expected to give a normal response message. However, the PLC may fail to respond or sometimes respond the error reason after receiving the command message from the main station. Hereinafter is the description that the PLC fails to respond to the main station equipment or it responds the error reason.

1. PLC fails to receive correct command message due to communication error. Therefore, when the PLC fails to respond to the message, the main station equipment must set a communication timeout condition.
2. Without communication error, the PLC receives a valid communication message, but fails to understand the message, so the PLC may give an abnormity response to the main station. The highest level bit of the command code responding to the response is set to be 1 and an abnormity code may be returned to explain the abnormity response reason.

The following is abnormity response example when command code is 01H and abnormity response code is 02H.

Command message:

Field name	Data (hexadecimal)
Start	Keep no input data ≥10 ms
Slave station address	01
Command code	01
Initial data address	04
	00
Data number (unit: byte)	00
	10
CRC check code low byte	3C
CRC check code high byte	F6
End	Keep no input data ≥10 ms

Response message:

Field name	Data (hexadecimal)
Start	Keep no input data ≥10 ms
Slave station address	01
Command code	81
Abnormity code	02
CRC check code low byte	C1
CRC check high byte	91
End	Keep no input data ≥10 ms

3. MODBUS Addresses of Various Parameters

No.	Type	Variable name	Register address	MODBUS address	R/W Attribute	Remarks
1	Operation parameters	Input current	D651	404748	R	Measured value *1
2		Output current	D650	404747	R	Measured value *1
3		Actual operation frequency	D670	404767	R	Measured value /100
4		Input voltage	D620	404717	R	Measured value *1
5		Output voltage	D619	404716	R	Measured value *1
6		Input power	D624	404721	R	Measured value *1
7		Output power	D621	404718	R	Measured value *1
8		Reference frequency	D671	404768	R	Measured value /100
9	Fault information	Input overvoltage	M226	2275	R	0: failure; 1: normal
10		Input voltage failure	M13	2062	R	0: normal; 1: failure
11		Output phase loss	M231	2280	R	0: failure; 1: normal
12		Output overcurrent	M225	2274	R	0: failure; 1: normal
13		Input overcurrent	M224	2273	R	0: failure; 1: normal
14		System overload	M229	2278	R	0: failure; 1: normal
15		Earthing failure	M230	2279	R	0: failure; 1: normal
16		Transformer extra high temperature	M18	2067	R	0: normal; 1: failure
17		Cabinet door open	M14	2063	R	0: normal; 1: failure
18		Aux control power #1 & # 2 fault	M35	2084	R	0: normal; 1: failure
19		Power cell fault	M67	2116	R	0: normal; 1: failure
20		Input phase loss	M228	2277	R	0: failure; 1: normal
21	Alarm information	Input undervoltage	M227	2276	R	0: failure; 1: normal
22		Cooling fan power failure	M143	2192	R	0: normal; 1: failure
23		Transformer high temperature alarm	M17	2066	R	0: normal; 1: failure
24		PLC communication failure	M21	2070	R	0: normal; 1: failure
25		MVD fan overvoltage/undervoltage	M12/M11	002061/002060	R	0: normal; 1: failure
26		Control power #1 fault	M15	2064	R	0: normal; 1: failure
27		Control power #2 fault	M16	2065	R	0: normal; 1: failure
28		UPS fault	M55	2104	R	0: normal; 1: failure

No.	Type	Variable name	Register address	MODBUS address	R/W Attribute	Remarks
29		Cooling fan over temperature	M52	2101	R	0: normal; 1: failure
30		Power cell alarm	M68	2117	R	0: normal; 1: failure
31		Analog input loss	M19	2068	R	0: normal; 1: failure
32	Failure information of power unit	U1 cell state information	D870	404967	R	See HMI display information
33		U2 cell state information	D873	404970	R	See HMI display information
34		U3 cell state information	D876	404973	R	See HMI display information
35		U4 cell state information	D879	404976	R	See HMI display information
36		U5 cell state information	D882	404979	R	See HMI display information
37		U6 cell state information	D885	404982	R	See HMI display information
38		U7 cell state information	D888	404985	R	See HMI display information
39		U8 cell state information	D891	404988	R	See HMI display information
40		U9 cell state information	D894	404991	R	See HMI display information
41		V1 cell state information	D871	404968	R	See HMI display information
42		V2 cell state information	D874	404971	R	See HMI display information
43		V3 cell state information	D877	404974	R	See HMI display information
44		V4 cell state information	D880	404977	R	See HMI display information
45		V5 cell state information	D883	404980	R	See HMI display information
46		V6 cell state information	D886	404983	R	See HMI display information
47		V7 cell state information	D889	404986	R	See HMI display information
48		V8 cell state information	D892	404989	R	See HMI display information
49		V9 cell state information	D895	404992	R	See HMI display information
50		W1 cell state information	D872	404969	R	See HMI display information
51		W2 cell state information	D875	404972	R	See HMI display information
52		W3 cell state information	D878	404975	R	See HMI display information

No.	Type	Variable name	Register address	MODBUS address	R/W Attribute	Remarks
53		W4 cell state information	D881	404978	R	See HMI display information
54		W5 cell state information	D884	404981	R	See HMI display information
55		W6 cell state information	D887	404984	R	See HMI display information
56		W7 cell state information	D890	404987	R	See HMI display information
57		W8 cell state information	D893	404990	R	See HMI display information
58		W9 cell state information	D896	404993	R	See HMI display information
59	Voltage address of power unit bus	U1 cell state information	D400	404497	R	Measured value *1
60		U2 cell state information	D403	404500	R	Measured value *1
61		U3 cell state information	D406	404503	R	Measured value *1
62		U4 cell state information	D409	404506	R	Measured value *1
63		U5 cell state information	D412	404509	R	Measured value *1
64		U6 cell state information	D415	404512	R	Measured value *1
65		U7 cell state information	D418	404515	R	Measured value *1
66		U8 cell state information	D421	404518	R	Measured value *1
67		U9 cell state information	D424	404521	R	Measured value *1
68		V1 cell state information	D401	404498	R	Measured value *1
69		V2 cell state information	D404	404501	R	Measured value *1
70		V3 cell state information	D407	404504	R	Measured value *1
71		V4 cell state information	D410	404507	R	Measured value *1
72		V5 cell state information	D413	404510	R	Measured value *1
73		V6 cell state information	D416	404513	R	Measured value *1
74		V7 cell state information	D419	404516	R	Measured value *1
75		V8 cell state information	D422	404519	R	Measured value *1

No.	Type	Variable name	Register address	MODBUS address	R/W Attribute	Remarks
76		V9 cell state information	D425	404522	R	Measured value *1
77		W1 cell state information	D402	404499	R	Measured value *1
78		W2 cell state information	D405	404502	R	Measured value *1
79		W3 cell state information	D408	404505	R	Measured value *1
80		W4 cell state information	D411	404508	R	Measured value *1
81		W5 cell state information	D414	404511	R	Measured value *1
82		W6 cell state information	D417	404514	R	Measured value *1
83		W7 cell state information	D420	404517	R	Measured value *1
84		W8 cell state information	D423	404520	R	Measured value *1
85		W9 cell state information	D426	404523	R	Measured value *1
86	System communication information	U1 downlink communication information	M410	2459	R	0: failure; 1: normal
87		U2 downlink communication information	M414	2467	R	0: failure; 1: normal
88		U3 downlink communication information	M418	2475	R	0: failure; 1: normal
89		U4 downlink communication information	M422	2483	R	0: failure; 1: normal
90		U5 downlink communication information	M426	2491	R	0: failure; 1: normal
91		U6 downlink communication information	M430	2499	R	0: failure; 1: normal
92		U7 downlink communication information	M434	2503	R	0: failure; 1: normal
93		U8 downlink communication information	M438	2507	R	0: failure; 1: normal
94		U9 downlink communication information	M442	2511	R	0: failure; 1: normal

No.	Type	Variable name	Register address	MODBUS address	R/W Attribute	Remarks
95		V1 downlink communication information	M411	2460	R	0: failure; 1: normal
96		V2 downlink communication information	M415	2468	R	0: failure; 1: normal
97		V3 downlink communication information	M419	2476	R	0: failure; 1: normal
98		V4 downlink communication information	M423	2484	R	0: failure; 1: normal
99		V5 downlink communication information	M427	2492	R	0: failure; 1: normal
100		V6 downlink communication information	M431	2500	R	0: failure; 1: normal
101		V7 downlink communication information	M435	2504	R	0: failure; 1: normal
102		V8 downlink communication information	M439	2508	R	0: failure; 1: normal
103		V9 downlink communication information	M443	2512	R	0: failure; 1: normal
104		W1 downlink communication information	M412	2461	R	0: failure; 1: normal
105		W2 downlink communication information	M416	2469	R	0: failure; 1: normal
106		W3 downlink communication information	M420	2477	R	0: failure; 1: normal
107		W4 downlink communication information	M424	2485	R	0: failure; 1: normal
108		W5 downlink communication information	M428	2493	R	0: failure; 1: normal
109		W6 downlink communication information	M432	2501	R	0: failure; 1: normal

No.	Type	Variable name	Register address	MODBUS address	R/W Attribute	Remarks
110		W7 downlink communication information	M436	2505	R	0: failure; 1: normal
111		W8 downlink communication information	M440	2509	R	0: failure; 1: normal
112		W9 downlink communication information	M444	2513	R	0: failure; 1: normal
113		PLC input point	X0-X100	101025-101104	R	See the drawings
114		PLC output point	Y0-Y100	001281-001360	R	See the drawings
115	RS485 + RS485 Start up	MVD operation		2129	W	Pulse signal
116		Decelerated stop		2130	W	Pulse signal
117		Free stop		2131	W	Pulse signal
118		System reset		2132	W	Pulse signal
119		Audible and visual alarm		2134	W	Pulse signal
120		Frequency setting		404604	W	
121		RS485 communication mode setting (ASCII or RTU)	COM3(RS485) ASCII/ RTU mode selection (ASCII mode when in off state, RTU mode when in on state)	3369	W	
122		RS485 port communication address setting		405352	W	
123		RS485 port communication format setting		405206	W	

Annex C

MVD1000 Electrical parameters and dimensions table

MVD1000 outline drawings of combination cabinet shown below:

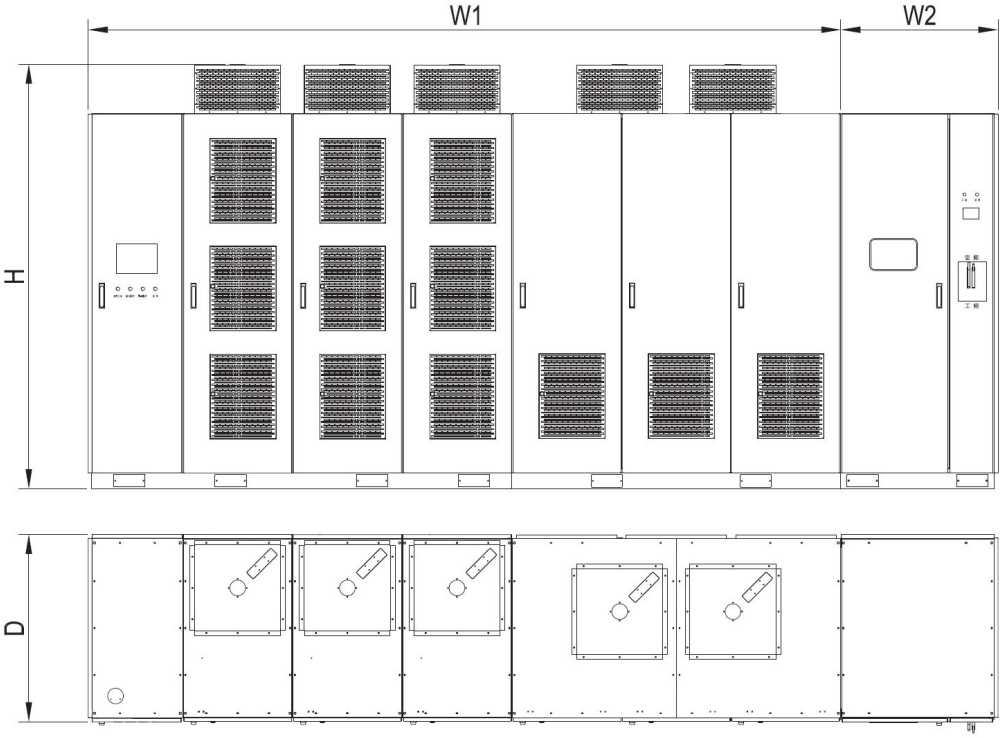

MVD1000 - Combination Cabinet Selection

Rated Voltage	Motor Power	MVD Model Name	H	W1	D	Weight	Bypass cabinet（optional）	
							W2	Weight
kV	kW		mm	mm	mm	kg	mm	kg
3.3	160	MVD1□A035A□□	2480	3200	1200	1500	980	800
	200	MVD1□A045A□□	2480	3200	1200	1500	980	800
	250	MVD1□A055A□□	2480	3200	1200	1800	980	800
	315	MVD1□A070A□□	2480	3200	1200	1800	980	800
	355	MVD1□A080A□□	2480	3200	1200	2600	980	800
	400	MVD1□A090A□□	2480	3200	1200	2600	980	800
	450	MVD1□A100A□□	2480	3200	1200	2600	980	800
	500	MVD1□A110A□□	2480	3200	1200	2600	980	800
	530	MVD1□A120A□□	2480	3200	1200	3300	980	800
	630	MVD1□A140A□□	2850	3700	1400	3300	980	800
	710	MVD1□A160A□□	2850	3700	1400	3300	980	800
	800	MVD1□A175A□□	2850	3700	1400	3300	980	800
	900	MVD1□A200A□□	2850	3700	1400	4000	980	800
	1000	MVD1□A220A□□	2850	3700	1400	4000	980	800

Rated Voltage	Motor Power	MVD Model Name	H	W1	D	Weight	Bypass cabinet（optional）	
							W2	Weight
kV	kW		mm	mm	mm	kg	mm	kg
	1120	MVD1□A245A□□	2850	3700	1400	4000	980	800
	1250	MVD1□A275A□□	2850	3700	1400	4800	980	800
	1350	MVD1□A300A□□	2850	3700	1400	4800	980	800
	1500	MVD1□A330A□□	2850	3700	1400	4800	980	800
	1800	MVD1□A375A□□	2850	4850	1400	9500	980	800
	2000	MVD1□A420A□□	2850	4850	1400	9500	980	800
	2560	MVD1□A535A□□	2850	5450	1400	10500	980	800
	3110	MVD1□A650A□□	2850	6200	1400	11500	980	800
	3840	MVD1□A750A□□	2850	6200	1400	12000	980	800
4.16	160	MVD1□B030A□□	2480	3500	1200	1600	980	800
	200	MVD1□B035A□□	2480	3500	1200	1600	980	800
	250	MVD1□B045A□□	2480	3500	1200	1600	980	800
	315	MVD1□B055A□□	2480	3500	1200	1900	980	800
	355	MVD1□B065A□□	2480	3500	1200	1900	980	800
	400	MVD1□B070A□□	2480	3500	1200	1900	980	800
	450	MVD1□B080A□□	2480	3500	1200	3000	980	800
	500	MVD1□B090A□□	2480	3500	1200	3000	980	800
	560	MVD1□B100A□□	2480	3500	1200	3000	980	800
	630	MVD1□B110A□□	2480	3500	1200	3000	980	800
	710	MVD1□B125A□□	2850	4200	1400	3800	980	800
	800	MVD1□B140A□□	2850	4200	1400	3800	980	800
	900	MVD1□B160A□□	2850	4200	1400	3800	980	800
	1000	MVD1□B165A□□	2850	4200	1400	3800	980	800
	1120	MVD1□B195A□□	2850	4200	1400	4300	980	800
	1250	MVD1□B220A□□	2850	4200	1400	4300	980	800
	1350	MVD1□B235A□□	2850	4200	1400	4300	980	800
	1500	MVD1□B260A□□	2850	4200	1400	5100	980	800
	1800	MVD1□B300A□□	2850	4200	1400	5100	980	800
	2000	MVD1□B330A□□	2850	4200	1400	5100	980	800
	2400	MVD1□B400A□□	2850	5400	1400	9500	980	800
	2520	MVD1□B420A□□	2850	5400	1400	9500	980	800
	3230	MVD1□B535A□□	2850	6000	1400	10400	980	800
	3920	MVD1□B650A□□	2850	6900	1400	11600	980	800
	4840	MVD1□B750A□□	2850	6900	1400	13500	980	800
	280	MVD1□C035A□□	2480	3800	1200	2500	980	800
	315	MVD1□C040A□□	2480	3800	1200	2500	980	800
	355	MVD1□C045A□□	2480	3800	1200	2500	980	800
	400	MVD1□C050A□□	2480	3800	1200	3100	980	800

Rated Voltage	Motor Power	MVD Model Name	H	W1	D	Weight	Bypass cabinet（optional）	
							W2	Weight
kV	kW		mm	mm	mm	kg	mm	kg
6	450	MVD1□C055A□□	2480	3800	1200	3100	980	800
	500	MVD1□C060A□□	2480	3800	1200	3100	980	800
	560	MVD1□C070A□□	2480	3800	1200	3100	980	800
	630	MVD1□C075A□□	2480	3800	1200	3800	980	800
	710	MVD1□C085A□□	2480	3800	1200	3800	980	800
	800	MVD1□C100A□□	2480	3800	1200	4600	980	800
	900	MVD1□C110A□□	2480	3800	1200	4600	980	800
	1000	MVD1□C120A□□	2480	3800	1200	4600	980	800
	1120	MVD1□C135A□□	2850	4700	1400	4600	980	800
	1250	MVD1□C150A□□	2850	4700	1400	5900	980	800
	1400	MVD1□C170A□□	2850	4700	1400	5900	980	800
	1600	MVD1□C185A□□	2850	4700	1400	7400	980	800
	1800	MVD1□C210A□□	2850	5000	1400	7400	980	800
	2000	MVD1□C230A□□	2850	5000	1400	7400	980	800
	2240	MVD1□C260A□□	2850	5000	1400	7800	980	800
	2500	MVD1□C290A□□	2850	5000	1400	7800	980	800
	2800	MVD1□C320A□□	2850	5000	1400	7800	980	800
	3150	MVD1□C360A□□	2850	7180	1400	10500	980	800
	3550	MVD1□C410A□□	2850	7180	1400	10500	980	800
	3640	MVD1□C420A□□	2850	7180	1400	10500	980	800
	4660	MVD1□C535A□□	2850	8000	1400	12000	980	800
	5650	MVD1□C650A□□	2850	8000	1400	13200	980	800
	6980	MVD1□C750A□□	2850	8000	1400	14000	980	800
6.6	250	MVD1□D030A□□	2480	3800	1200	3200	980	800
	315	MVD1□D035A□□	2480	3800	1200	3200	980	800
	355	MVD1□D040A□□	2480	3800	1200	3200	980	800
	400	MVD1□D045A□□	2480	3800	1200	3200	980	800
	450	MVD1□D050A□□	2480	3800	1200	3200	980	800
	500	MVD1□D055A□□	2480	3800	1200	3800	980	800
	560	MVD1□D065A□□	2480	3800	1200	3800	980	800
	630	MVD1□D070A□□	2480	3800	1200	3800	980	800
	710	MVD1□D080A□□	2480	3800	1200	5700	980	800
	800	MVD1□D090A□□	2480	3800	1200	5700	980	800
	900	MVD1□D100A□□	2480	3800	1200	5700	980	800
	1000	MVD1□D110A□□	2480	3800	1200	5700	980	800
	1120	MVD1□D125A□□	2850	4700	1400	6800	980	800
	1250	MVD1□D140A□□	2850	4700	1400	6800	980	800
	1350	MVD1□D150A□□	2850	4700	1400	6800	980	800
	1500	MVD1□D165A□□	2850	4700	1400	6800	980	800

Rated Voltage	Motor Power	MVD Model Name	H	W1	D	Weight	Bypass cabinet（optional）	
							W2	Weight
kV	kW		mm	mm	mm	kg	mm	kg
	1800	MVD1□D190A□□	2850	4700	1400	6800	980	800
	2000	MVD1□D210A□□	2850	5000	1400	8300	980	800
	2240	MVD1□D235A□□	2850	5000	1400	8300	980	800
	2400	MVD1□D250A□□	2850	5000	1400	8300	980	800
	2500	MVD1□D265A□□	2850	5000	1400	9400	980	800
	2900	MVD1□D305A□□	2850	5000	1400	9400	980	800
	3150	MVD1□D330A□□	2850	5000	1400	9400	980	800
	3550	MVD1□D370A□□	2850	6600	1400	9800	980	800
	4000	MVD1□D420A□□	2850	6600	1400	9800	980	800
	5120	MVD1□D535A□□	2850	7800	1400	10700	980	800
	6220	MVD1□D650A□□	2850	7800	1400	11300	980	800
	7680	MVD1□D750A□□	2850	7800	1400	12500	980	800
10	280	MVD1□E020A□□	2480	4800	1200	3800	980	800
	315	MVD1□E022A□□	2480	4800	1200	3800	980	800
	355	MVD1□E025A□□	2480	4800	1200	3800	980	800
	400	MVD1□E030A□□	2480	4800	1200	3800	980	800
	450	MVD1□E035A□□	2480	4800	1200	3800	980	800
	560	MVD1□E040A□□	2480	4800	1200	3800	980	800
	630	MVD1□E045A□□	2480	4800	1200	3800	980	800
	710	MVD1□E055A□□	2480	4800	1200	5100	980	800
	800	MVD1□E060A□□	2480	4800	1200	5100	980	800
	900	MVD1□E065A□□	2480	4800	1200	5100	980	800
	1000	MVD1□E075A□□	2480	4800	1200	5900	980	800
	1120	MVD1□E080A□□	2480	4800	1200	5900	980	800
	1250	MVD1□E090A□□	2480	4800	1200	5900	980	800
	1400	MVD1□E105A□□	2480	4800	1200	6500	980	800
	1600	MVD1□E115A□□	2480	4800	1200	6500	980	800
	1800	MVD1□E130A□□	2850	6000	1400	6500	980	800
	2000	MVD1□E140A□□	2850	6000	1400	8200	980	800
	2240	MVD1□E155A□□	2850	6000	1400	8200	980	800
	2500	MVD1□E175A□□	2850	6000	1400	8200	980	800
	2800	MVD1□E195A□□	2850	6400	1400	9700	980	800
	3150	MVD1□E220A□□	2850	6400	1400	9700	980	800
	3550	MVD1□E250A□□	2850	6400	1400	10800	980	800
	4000	MVD1□E275A□□	2850	6400	1400	10800	980	800
	4500	MVD1□E310A□□	2850	6400	1400	10800	980	800
	5000	MVD1□E350A□□	2850	6400	1400	10800	980	800
	6070	MVD1□E420A□□	2850	9280	1400	13500	980	800
	7760	MVD1□E535A□□	2850	10400	1400	14000	980	800

Rated Voltage	Motor Power	MVD Model Name	H	W1	D	Weight	Bypass cabinet（optional）	
							W2	Weight
kV	kW		mm	mm	mm	kg	mm	kg
	9420	MVD1□E650A□□	2850	11400	1400	15600	980	800
	11640	MVD1□E750A□□	2850	11400	1400	17300	980	800
11	315	MVD1□F020A□□	2480	5100	1200	5000	980	800
	355	MVD1□F025A□□	2480	5100	1200	5000	980	800
	450	MVD1□F030A□□	2480	5100	1200	5000	980	800
	530	MVD1□F035A□□	2480	5100	1200	5000	980	800
	560	MVD1□F040A□□	2480	5100	1200	5000	980	800
	630	MVD1□F045A□□	2480	5100	1200	5000	980	800
	710	MVD1□F050A□□	2480	5100	1200	6100	980	800
	800	MVD1□F055A□□	2480	5100	1200	6100	980	800
	900	MVD1□F060A□□	2480	5100	1200	6100	980	800
	1000	MVD1□F065A□□	2480	5100	1200	6100	980	800
	1120	MVD1□F075A□□	2480	5100	1200	7500	980	800
	1250	MVD1□F085A□□	2480	5100	1200	7500	980	800
	1350	MVD1□F090A□□	2480	5100	1200	7500	980	800
	1500	MVD1□F100A□□	2480	5100	1200	7500	980	800
	1800	MVD1□F120A□□	2480	5100	1200	7500	980	800
	2000	MVD1□F135A□□	2850	6000	1400	9500	980	800
	2400	MVD1□F150A□□	2850	6000	1400	9500	980	800
	2800	MVD1□F175A□□	2850	6000	1400	9500	980	800
	3000	MVD1□F190A□□	2850	6000	1400	9500	980	800
	3150	MVD1□F200A□□	2850	6400	1400	12000	980	800
	3400	MVD1□F215A□□	2850	6400	1400	12000	980	800
	3800	MVD1□F240A□□	2850	6400	1400	12000	980	800
	4000	MVD1□F250A□□	2850	6400	1400	12000	980	800
	4200	MVD1□F265A□□	2850	6400	1400	13100	980	800
	4600	MVD1□F290A□□	2850	6400	1400	13100	980	800
	5000	MVD1□F315A□□	2850	6400	1400	13100	980	800
	5600	MVD1□F350A□□	2850	6400	1400	13100	980	800
	6000	MVD1□F375A□□	2850	9900	1400	13900	980	800
	6680	MVD1□F420A□□	2850	9900	1400	13900	980	800
	8540	MVD1□F535A□□	2850	11900	1400	15000	980	800
	10360	MVD1□F650A□□	2850	12500	1400	16800	980	800
	12800	MVD1□F8750A□□	2850	12500	1400	19000	980	800

MVD1000 Outline Drawings for All-In-One Cabinet

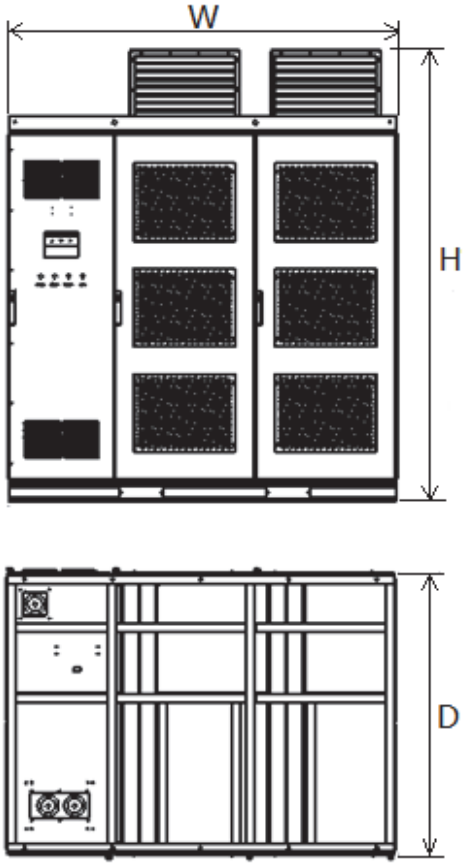

6kV/6.6kV series – Outline drawings

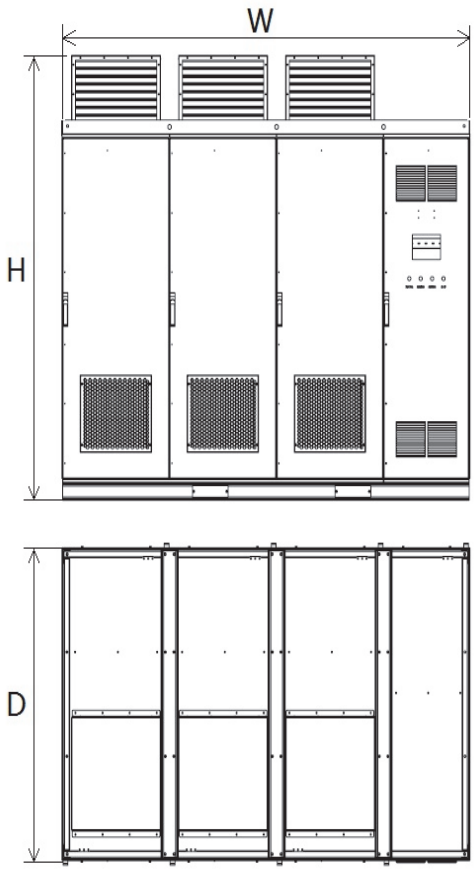

10kV/11kV series - Outline drawings

MVD1000 – All-In-One Cabinet Selection

Rated Voltage	Motor Power	MVD Model Nme	H	W1	D	Weight
kV	kW		mm	mm	mm	kg
6	280	MVD13C035A□□	2490	2210	1500	3100
	315	MVD13C040A□□				
	355	MVD13C045A□□				
	400	MVD13C050A□□				
	450	MVD13C055A□□	2490	2210	1600	3600
	500	MVD13C060A□□				
	560	MVD13C070A□□				
	630	MVD13C075A□□	2490	2410	1600	3800
	710	MVD13C085A□□				
	800	MVD13C100A□□				
	900	MVD13C110A□□				
	1000	MVD13C120A□□				

Rated Voltage	Motor Power	MVD Model Nme	H	W1	D	Weight
kV	kW		mm	mm	mm	kg
6.6	250	MVD13D030A□□	2490	2210	1500	3100
	315	MVD13D035A□□				
	355	MVD13D040A□□				
	400	MVD13D045A□□				
	450	MVD13D050A□□				
	500	MVD13D055A□□	2490	2210	1600	3600
	560	MVD13D065A□□				
	630	MVD13D070A□□				
	710	MVD13D080A□□	2490	2410	1600	3800
	800	MVD13D090A□□				
	900	MVD13D100A□□				
	1000	MVD13D110A□□				
10	280	MVD13E020A□□	2490	2910	1500	4100
	315	MVD13E022A□□				
	355	MVD13E025A□□				
	400	MVD13E030A□□				
	450	MVD13E035A□□				
	500	MVD13E036A□□				
	560	MVD13E040A□□				
	630	MVD13E045A□□				
	710	MVD13E055A□□	2580	2860	1800	4900
	800	MVD13E060A□□				
	900	MVD13E065A□□				
11	315	MVD13F020A□□	2490	2910	1500	4100
	355	MVD13F025A□□				
	450	MVD13F030A□□				
	530	MVD13F035A□□				
	560	MVD13F040A□□	2490	2910	1500	4100
	630	MVD13F045A□□				
	710	MVD13F050A□□				
	800	MVD13F055A□□	2580	2860	1800	4900
	900	MVD13F060A□□				
	1000	MVD13F065A□□				

Note: The table above shows the standard dimensions of the MVD1000 medium voltage drive, and the final dimensions of the product will be specifically designed and determined by the technical personnel according to the requirements of the customer.

Annex D

MVD1000 Cable requirements and terminal details

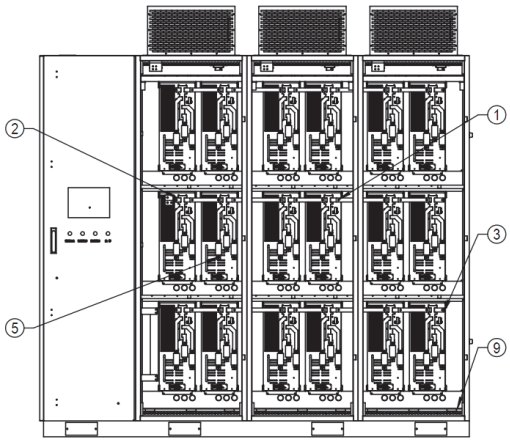

Controller cabinet/Power cell cabinet

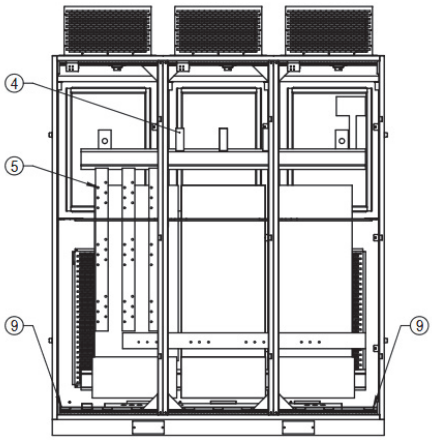

Transformer cabinet

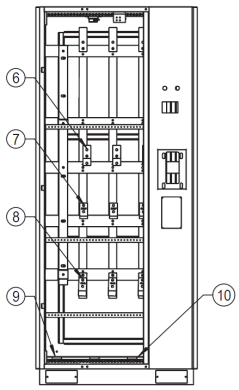

Bypass cabinet

Cable requirements and terminal details

Item	Position description (as shown in picture)	Cable specification (sectional area mm^2)	Terminal model	Screw model	Torque applicable Range (N·m)
①	Copper busbars for connecting power cells in series	30	None	M8×20	23.3~31.0
		60	None	M8×20	23.3~31.0
		75	None	M8×20	23.3~31.0
②	Output neutral point earthing	10	TLK10-8	M8×20	23.3~31.0
		16	TLK16-8	M8×20	23.3~31.0
		35	TLK35-8	M8×20	23.3~31.0
		70	TLK70-8	M8×20	23.3~31.0
		120	TLK120-8	M8×20	23.3~31.0
		150	TLK150-8	M8×20	23.3~31.0
③	Output power line	10	TLK10-8	M8×20	23.3~31.0
		16	TLK16-8	M8×20	23.3~31.0
		35	TLK35-8	M8×20	23.3~31.0
		70	TLK70-8	M8×20	23.3~31.0
		120	TLK120-8	M8×20	23.3~31.0
		150	TLK150-8	M8×20	23.3~31.0
④	Transformer input line	10	TLK10-10	M10×40	20.8~37.5
		16	TLK16-10	M10×40	20.8~37.5
		35	TLK35-10	M10×40	20.8~37.5
		70	TLK70-10	M10×40	20.8~37.5
		120	TLK120-12	M12×40	36.5~65.5
		150	TLK150-12	M12×40	36.5~65.5

Item	Position description (as shown in picture)	Cable specification (sectional area mm^2)	Terminal model	Screw model	Torque applicable Range(N·m)
⑤	Transformer output line	6	TLK6-8	M8 nut	23.3~31.0
		10	TLK10-8	M8 nut	23.3~31.0
		16	TLK16-8	M8 nut	23.3~31.0
		35	TLK35-8	M8 nut	23.3~31.0
		50	TLK50-8	M8 nut	23.3~31.0
		70	TLK70-8	M8 nut	23.3~31.0
⑥	Variable frequency output line	10	TLK10-10	M10×40	20.8~37.5
		16	TLK16-10	M10×40	20.8~37.5
		35	TLK35-10	M10×40	20.8~37.5
		70	TLK70-10	M10×40	20.8~37.5
		120	TLK120-12	M12×40	36.5~65.5
		150	TLK150-12	M12×40	36.5~65.5
⑦	Power connection line	185	TLK185-12	M12×40	36.5~65.5
⑧	Motor connection line	185	TLK185-12	M12×40	36.5~65.5
⑨	Earthing connection between cabinets	16	TLK16-8	M8×20	23.3~31.0
⑩	System earthing line	95	TLK95-8	M8×20	23.3~31.0

Note: 1. The applicable screw torque value is the range recommended.

2. Items 7, 8 and 10 are the recommended values of the wiring terminals for connecting with the user end.

3. The wire sectional area recommended by items 7 and 8 is based on the single-cable method of the three-core cable and an ambient temperature of 40°C. If the conditions change (cable configuration, cable bundle and ambient temperature), please refer to the design information according to the cable configuration.

4. The highest temperature of the cable in the cabinet when operating continuously is 90°C.

5. The motor cable in the cabinet is copper-core with ethylene-propylene rubber insulation and chloroethene jacket.

Annex E

MVD1000 Optional Device Description

1. Start-up cabinet description

Function

- Phase-shifting transformer with huge capacity might produce a magnetizing surge as 6~8 times as the rated current of transformer itself.
- Power unit of MVD contains many capacitors, and it would have a larger charge current when the high voltage is applied. The main function of start-up cabinet is to depress these two kinds of impulse currents to guarantee the safety for user`s electrical network.

Principal

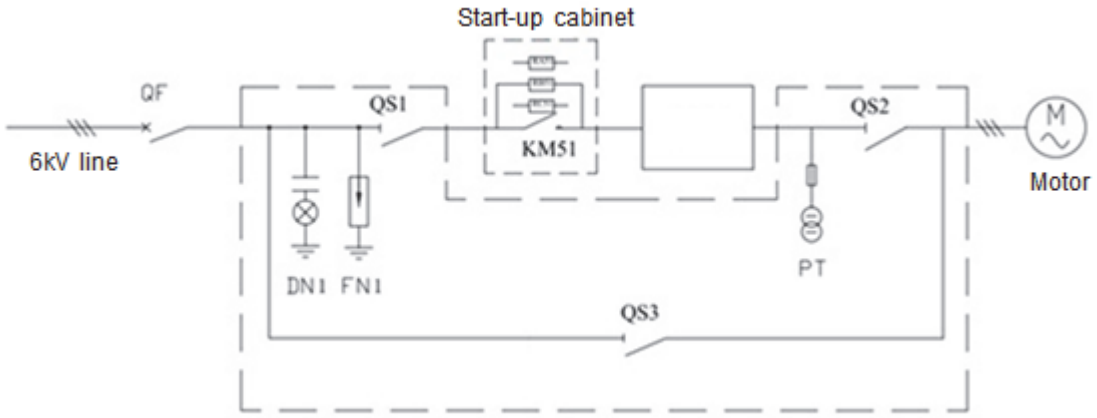

Fig.1 Start-up cabinet primary side diagram

Figure 1 is the diagram of start-up cabinet primary side; it should be installed between the high-voltage power input and phase-shifting transformer. Through the current limiting function of resistance in the split second when MCB of MVD is closed, magnetizing surge and charge current of capacitance can be efficiently limited. After powering-up procedure of MVD is done, the current-limiting resistance will pass through KM51 bypass, and then the drive will be able to function normally.

Basic electrical components

The main electrical components of start-up cabinet are high-voltage switch (vacuum contactor or vacuum breaker) and current-limiting resistor, shown in Fig.2 and Fig.3.

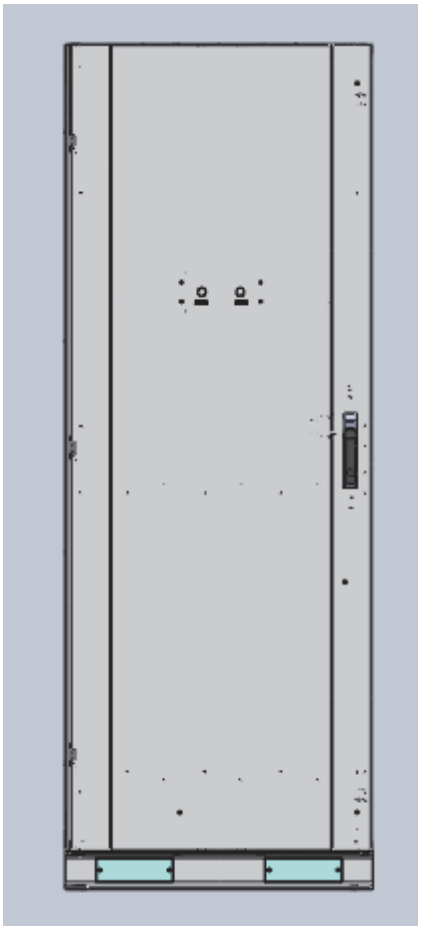

Fig.2 Front view

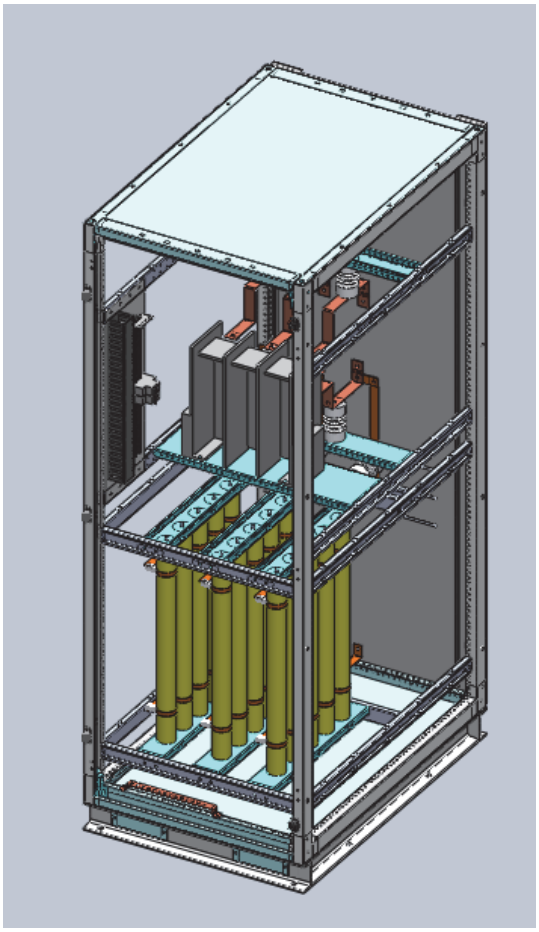

Fig.3 Inside view

Function of current-limiting resistance is to limit the primary current when a high voltage is connected; each resistor is capable of bearing a 30KJ power in the split second of powering up. How much resistance of start-up cabinet is needed will be decided by the capacity of MVD, the larger the capacity is the more current-limiting resistors are needed.

Function of high-voltage switch is to short cut the current-limiting resistor after powering-up procedure, making MVD to function under normal load. Vacuum contactor can be used. If the rated current is small; on the contrary, vacuum breaker can be used if the rated current is large.

Process

- Power up MVD.
- Control program will confirm if system is ready and cabinet switch is separated or not.
- Power up start-up cabinet, and control program will count the lasting time until the process is accomplished; this process will need about 5 seconds.
- Start-up cabinet switch close will short cut the charged resistor, and MVD will be under running-allowed status.

2. One-to-one auto bypass cabinet description

Primary Circuit Diagram (as Fig.1)

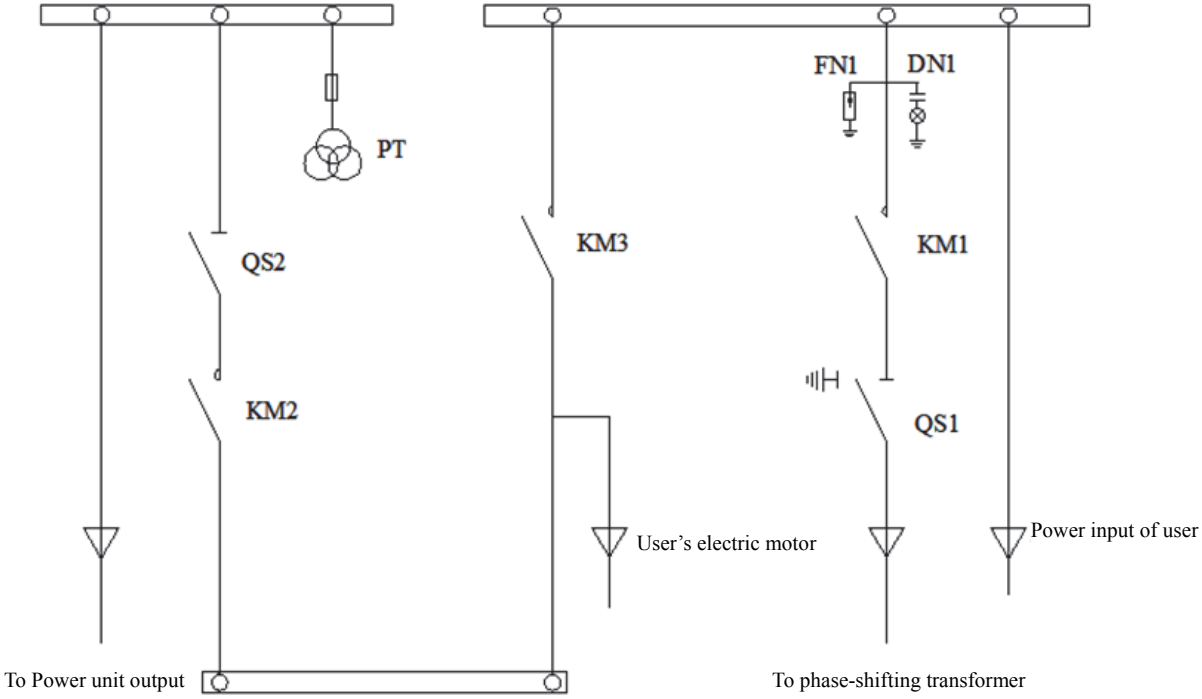

Fig.1 Primary circuit of auto bypass cabinet

Detail:

- KM1~KM3: high-voltage vacuum contactors.
- QS1~QS2: manual separation knife switches.
- When MVD is running: QS1 & QS2 closed, KM1 & KM2 closed, KM3 open.
- When frequency is bypassing: KM1 & KM2 open, KM3 closed.
- When frequency is under maintaining: KM1 & KM2 open, KM3 closed, QS1 & QS2 open.
- Procedure when MVD running switched to frequency bypassing: KM1 is open at first, then KM2 is open, and KM3 is closed.

Secondary control logic chart (as Fig.2)

Detail:

- The three switches KM1~KM3 use assistant contact interlock to ensure the time course will be followed, i.e. KM1will not open and KM2 will not act when the normally-closed contactor of KM1 is connected into the opening circuit of KM2. At the same time, the normally-closed contactor of KM2 will be connected to the MCB-closed circuit of KM3, and the normally-closed contactor of KM3 will be connected to the MCB-closed circuit of KM2, which ensures KM3 is not able to close

MCB when KM2 is not opening, and KM2 is not able to close MCB when KM3 is not opening.

- Status of these five switches KM1~KM3 and QS1~QS2 will be monitored through PLC. If any switch is not at the right working position, system will not allow the MCB closed, and powering up high voltage to system will be forbidden. If MVDgoes to a bad crash, MVD will break the switch automatically to cut off high-voltage input for safety if KM1 in not able to open during the process of variable-frequency switching to working-frequency automatically.
- The two switches KM2~KM3 control the function of reserving postponed action in the circuit, which can adjust the action interval of the switch during the process of variable-frequency switching to working-frequency; being more convenient to calibrate machine on site according to the status of electric motor and load of the customer, on the premise of a guarantee to switch speed reasonably to avoid an over-current malfunction because of the electric motor remanence.

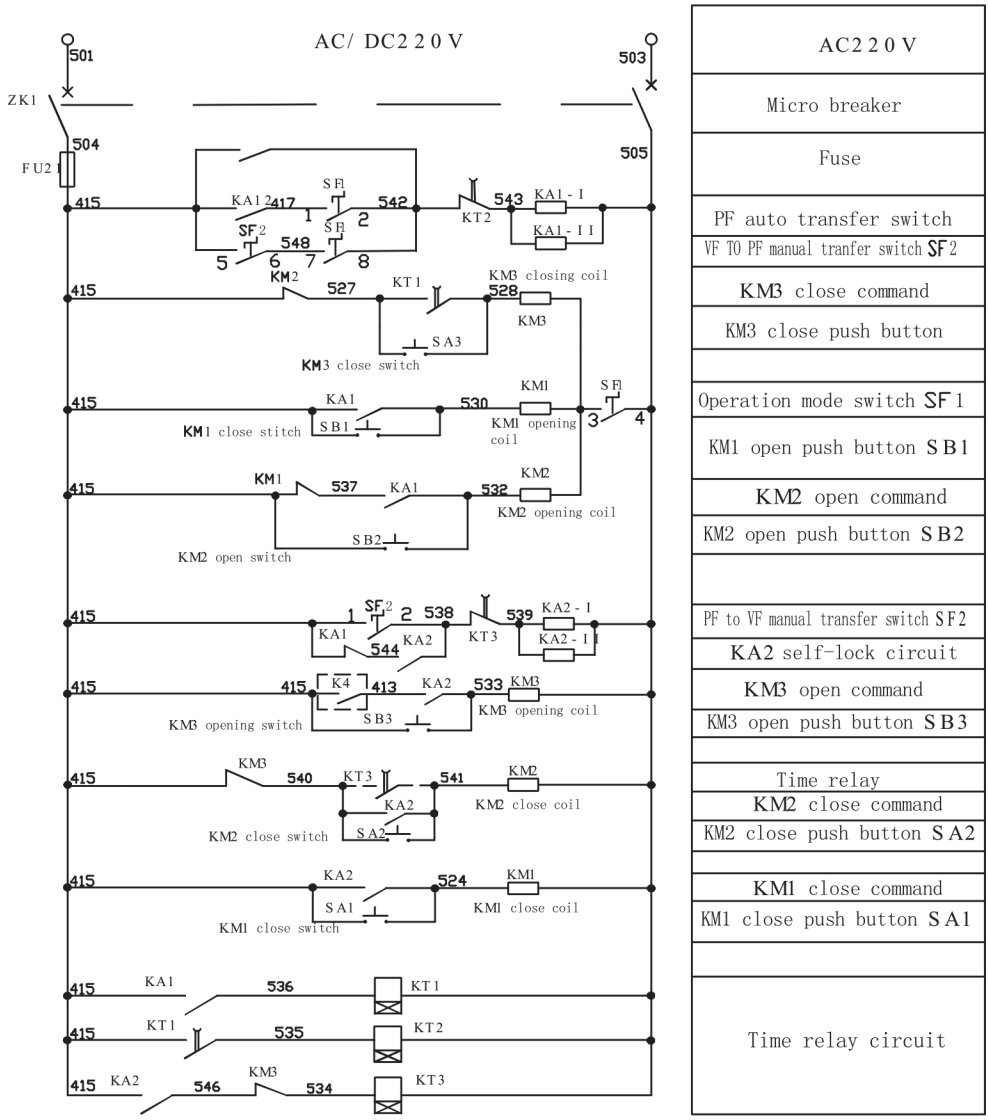

Fig. 2 Secondary control logic diagram of VF switching to PF of auto bypass cabinet

- Optional switch SF1 of auto bypass cabinet working mode is available, making it more flexible to choose working mode to prevent incorrect operation, as shown in Fig.3.
  - “Auto” mode: Allowing switching to PF bypass automatically when MVD is in a bad crash.
  - “Manual” mode: Customer can manually switch to working-frequency bypass according to the real production requirements when MVD is normally running.
  - “Forbidden” mode: If the production conditions do not allow the switching to working-frequency bypass, this mode can be selected to prevent incorrect operation.

Fig.3 Selection switch of auto bypass cabinet working Mode

- The switch SF2 for variable-frequency/Power-frequency switching with each other is available, as shown in Fig.4.
  - When auto bypass cabinet is under “manual” mode, and this switch is at “PF” (power frequency) position, MVD will switch system to PF bypass status automatically.
  - When this switch is at ”VF” (variable frequency) position, MVD under the power-frequency bypass status can be switched to variable-frequency mode automatically. (QS1 and QS2 must be closed) This function will need the coordination of engine racing starting-up; therefore, engine racing must be enabled and will need to comply with all the related electric motor parameters of customer.

Action Logic:

KM1 is closed, then bypass switch KM3 will be open if self-detection shows normal after ten seconds, and then close KM2, auto engine racing of MVD will start up, and power-frequency will be switched to variable-frequency.

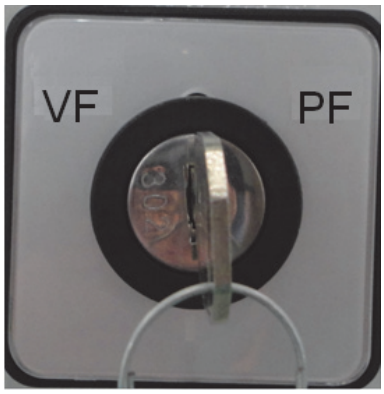

Fig.4 Variable-frequency/power-frequency switch

3. Dual auto bypass cabinet description

Primary Circuit Diagram (as Fig.1)

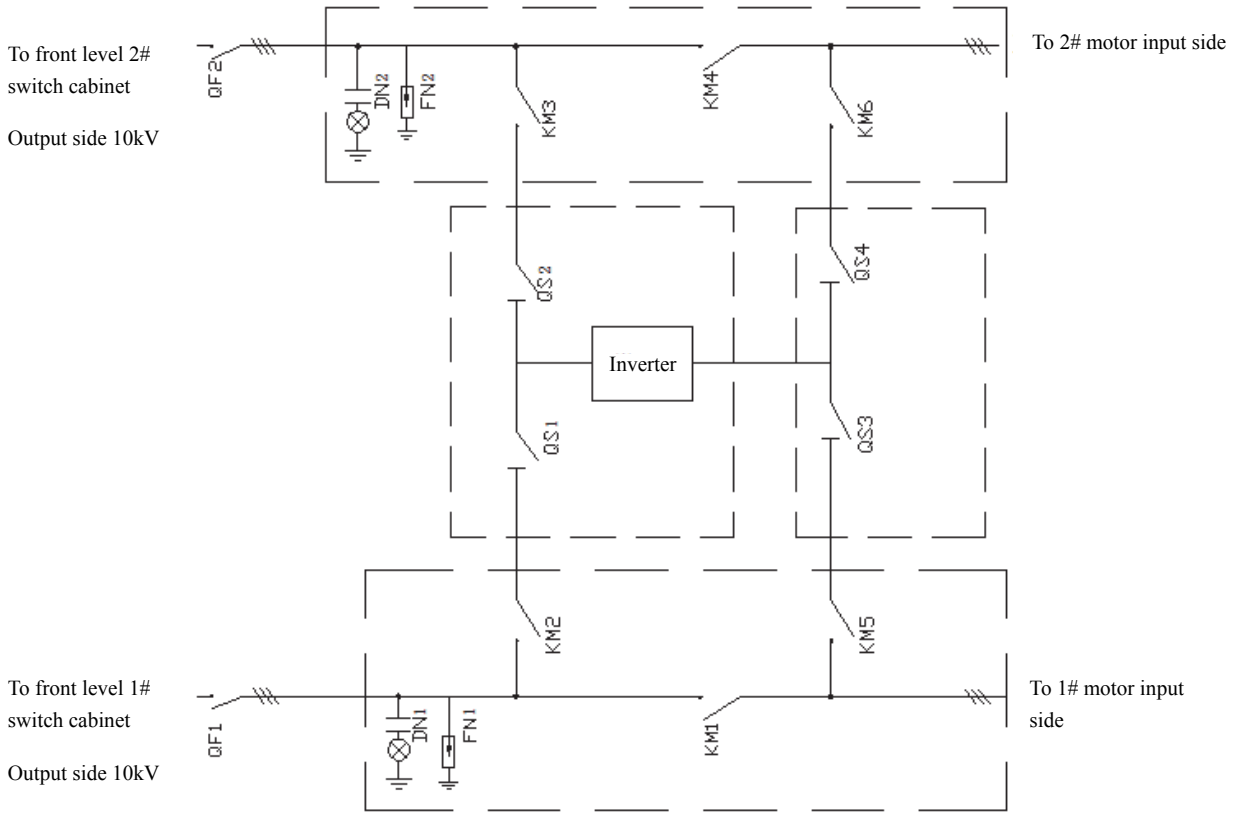

Fig.1 Primary circuit of dual auto bypass cabinet

Detail:

- 1# and 2# electric motors are both under maintenance: all the contactors and knife switches are open.
- 1# and 2# electric motors are both under PF mode: KM1 and KM4 are closed, others are open. (inspection and maintenance can be implemented under this status)
- 1# electric motor is under VF mode, and 2# is under PF mode: KM2, KM5, QS1 and QS3 are closed, KM2 is open; KM3, KM6, QS2 and QS4 are open, KM4 is closed.
- 1# electric motor is under PF mode, and 2# is under VF mode: KM2, KM5, QS1 and QS3 are open, KM1 is closed; KM3, KM6, QS2 and QS4 are closed, KM4 is open.
- 1# electric motor is under VF mode, and 2# is under maintenance: KM2, KM5, QS1 and QS3 are closed, others are open.
- 1# electric motor is under maintenance, and 2# is under VF mode: KM3, KM6, QS2 and QS4 are closed, others are open.
- 1# electric motor is under PF mode, and 2# is under maintenance: KM2, KM5, QS1 and QS3 are open, KM1 is closed; others are open.
- 1# electric motor is under maintenance, and 2# is under PF mode: KM3, KM6, QS2 and QS4 are open, KM4 is closed; others are open.
- When any one electric motor is under VF mode, system will switch to PF circuit when

MVD has a bad crash if “auto” mode is selected; action process is KM2 and KM5 are open, KM1 is closed. (2# is KM3 and KM6 are open, KM4 is closed)

- Two electric motors cannot be under VF mode at the same time.

  List is as below:

1# motor	PF	PF	PF	VF	-	VF	maintenance	maintenance	maintenance
2# motor	PF	VF	maintenance	PF	-	maintenance	PF	VF	maintenance

Operation sequence:

- VF mode activated operation sequence of 1# electric motor: QS1 closed → QS3 closed → KM2 closed → KM5 closed, after MCB close permission of 1# MVD is finally confirmed, close the front level breaker of customer.
- VF mode activated operation sequence of 2# electric motor: QS2 closed → QS4 closed → KM3 closed → KM6 closed, after MCB close permission of 2# MVD is finally confirmed, close the front level breaker of customer.
- Sequence of MVD inspection and maintenance:

  Opened KM2, KM3, KM5 and KM6 vacuum contactors → opened all the knife switches of QS1~QS4.

  Inspection and maintenance is accomplished after all the sequences above are done.

Logic interlock:

Shown as Fig.1:

- QS1 and QS2 are mechanically interlocked and cannot be under closed status at the same time; QS3 and QS4 are mechanically interlocked and cannot be under closed status at the same time.
- KM2 and KM3 are electrically interlocked and cannot be under closed status at the same time; KM5 and KM6 are electrically interlocked and cannot be under closed status at the same time.
- KM5 and KM1 are electrically interlocked and cannot be under closed status at the same time; KM4 and KM6 are electrically interlocked and cannot be under closed status at the same time.
- KM2 and QS1 are electrically interlocked, KM2 cannot be closed if QS1 is open, and QS1 is inoperable if KM2 is closed (the purpose is to prevent operating the knife switch when power is on; the normal sequence should be the knife switch is closed at first, then close the contactor). KM3 and QS2, KM5 and QS3, KM6 and QS4 are electrically interlocked, respectively. When knife switch is open, contactor cannot be closed; when contactor is closed, knife switch cannot be operated.

Auto bypass switching description:

- 1# auto bypass cabinet is connected to 1# electric motor, and 2# auto bypass cabinet is connected to 2# electric motor. Both operation logics are correspondent to the each sequence.

- The switch SF1 (#2 is SF3) for auto bypass cabinet working mode is available, making it more flexible to choose working mode to prevent incorrect operation, as shown in Fig.2.
  - “Auto” mode: Allowing switching to PF bypass automatically when MVD is in a bad crash.
  - “Manual” mode: Customer can manually switch to PF bypass according to the real production requirements when MVD is normally running.
  - “Forbidden” mode: If the production conditions do not allow the switching to PF bypass, this mode can be selected to prevent incorrect operation.

Fig.2 Selection switch of auto bypass cabinet working mode

- The switch SF2 for VF/PF switching with each other is available (self-reset) (2# is SF4), as shown in Fig.3.
  - When auto bypass cabinet is under “manual” mode, and this switch is at “PF” (Power frequency) position, MVD will switch system to PF bypass status automatically.
  - The Switch will self-reset to the middle position if it is switched to “VF”, making this operation invalid. (VF position is as reserved)
- The two switches KM5 and KM1 control the function of reserving postponed action in the circuit, which can adjust the action interval of the switch during the process of VF switching to PF; being more convenient to calibrate machine on site according to the status of electric motor and load of the customer, on the premise of a guarantee to switch speed reasonably to avoid an over-current malfunction because of the electric motor remanence. (standard setting is: postponed time of KT1 is 5~10 seconds, and KT2 is 10 seconds)

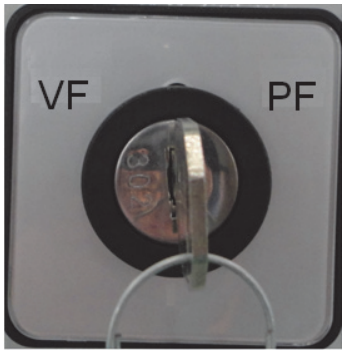

Fig.3 Variable-frequency/power-frequency switch

4. Remote control box description

Introduction

MVD remote control box is an intelligent instrument; user can easily control start-up, stop, acceleration, and deceleration and positive/negative rotation of MVD through RS485 network, and it can feedback the reference frequency and the output frequency of MVD in real time. Communication distance can be as long as 1200m (9600bps), which is able to reduce the noise to MVD efficiently.

Looks

There are five items in total of remote control box:

- Touch panel screen
- LED indicator of high-voltage power on
- LED indicator of MVD running
- LED indicator of fault
- Emergency stop button

Functions and Features

- User can use touch panel interface to control start-up, stop, acceleration, deceleration and positive/negative operation of MVD through remote box.
- LED indicator of high-voltage power on: indicator will light up if MVD high-voltage is powered up.
- LED indicator of MVD running: indicator will light up if MVD is running.
- LED indicator of fault: indicator will light up if MVD breaks down.
- Emergency stop button: response to the emergency of MVD in case for user.

Operation Description:

Under powered condition of MVD system, select MVD local HMI+HMI operation, instruction detail is as below:

- Check all the cables before powering-up, close the doors of cabinet.
- Control cabinet is powered up; check all the positions of emergency stop buttons. Check if there is any hint of HMI MCB close permission.
- Select Operation mode/ Reference set is RS485+RS485.

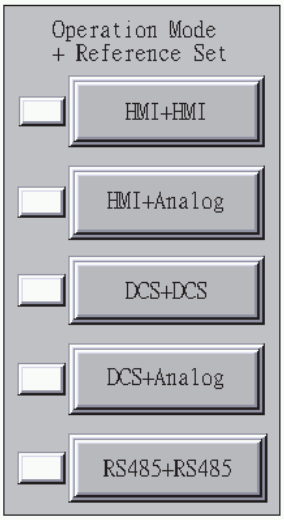

- Close QF1 switch in remote control box, check if the communication of HMI and MVD is normal or not, and select system control mode as close-loop or open-loop control according to the site situation.
- Close the high-voltage breaker of user's site, after the module is precharged for 10 seconds, press system reset in remote control box, check if there is any malfunction hint of LED indicator in control box.
- If system uses close-loop control, return to the main interface of remote control box, and system will be running after the frequency is set.
- If system uses open-loop control, set the target value, PID parameter and time in close-loop setting page. Check the feedback value to adjust all these parameters, this value will be needed to be tuned through experience. Click "run" after the parameters are set up.

Delta Electronics, Inc.
3 Tungyuan Road, Chungli Industrial Zone,
Taoyuan County 32063, Taiwan, R.O.C.
Tel: +886 3 452 6107
Fax:+886 3 452 7314
Web: www.deltaww.com/mvd
Service phone: +886 3 452 6107 #7956